MITSUBISHI ELECTRIC

HFC utilized R410A

SPLIT-TYPE, HEAT PUMP AIR CONDITIONERS

December 2023

No. OCH810
REVISED EDITION-B

TECHNICAL & SERVICE MANUAL

<Outdoor unit>

[Model Name]	[Service Ref.]
MXZ-SM36NAM2	MXZ-SM36NAM2-U1
MXZ-SM48NAM2	MXZ-SM48NAM2-U1
MXZ-SM60NAM2	MXZ-SM60NAM2-U1
MXZ-SM36NAMHZ2	MXZ-SM36NAMHZ2-U1
MXZ-SM42NAMHZ2	MXZ-SM42NAMHZ2-U1
MXZ-SM48NAMHZ2	MXZ-SM48NAMHZ2-U1

Revision:
- Connectable indoor units have been added.
- Some descriptions have been in REVISED EDITION-B.

OCH810A is void.

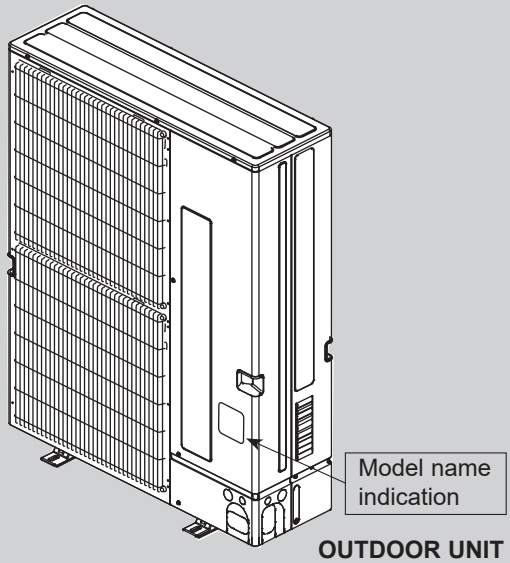

OUTDOOR UNIT

CONTENTS

1. SAFETY PRECAUTION ····· 2
2. OVERVIEW OF UNITS ····· 5
3. SPECIFICATIONS ····· 11
4. DATA ····· 14
5. OUTLINES AND DIMENSIONS ····· 36
6. WIRING DIAGRAM ····· 37
7. NECESSARY CONDITIONS FOR SYSTEM CONSTRUCTION ····· 40
8. TROUBLESHOOTING ····· 55
9. ELECTRICAL WIRING ····· 133
10. REFRIGERANT PIPING TASKS ····· 139
11. DISASSEMBLY PROCEDURE ····· 147
12. REMOTE CONTROLLER ····· 168

PARTS CATALOG (OCB810)

1 SAFETY PRECAUTION

1-1. ALWAYS OBSERVE FOR SAFETY

Before obtaining access to terminal, all supply circuit must be disconnected.

Preparation before the repair service

- Prepare the proper tools.
- Prepare the proper protectors.
- Provide adequate ventilation.
- After stopping the operation of the air conditioner, turn off the power-supply breaker.
- Discharge the condenser before the work involving the electric parts.

Precautions during the repair service

- Do not perform the work involving the electric parts with wet hands.
- Do not pour water into the electric parts.
- Do not touch the refrigerant.
- Do not touch the hot or cold areas in the refrigerating cycle.
- When the repair or the inspection of the circuit needs to be done without turning off the power, exercise great caution not to touch the live parts.
- When opening or closing the valve below freezing temperatures, refrigerant may spurt out from the gap between the valve stem and the valve body, resulting in injuries.

1-2. CAUTIONS RELATED TO NEW REFRIGERANT

Cautions for units utilizing refrigerant R410A

Use new refrigerant pipes.

Avoid using thin pipes.

Make sure that the inside and outside of refrigerant piping is clean and it has no contaminants such as sulfur, oxides, dirt, shaving particles, etc.,
which are hazard to refrigerant cycle.
In addition, use pipes with specified thickness.

Contamination inside refrigerant piping can cause deterioration of refrigerant oil, etc.

Follow the instructions below to prevent abrasive components contained in sandpaper and cutting tools from entering the refrigerant circuit because those components can cause failures of the compressor and valves.

- To deburr pipes, use a reamer or other deburring tools, not sandpaper.
- To cut pipes, use a pipe cutter, not a grinder or other tools that use abrasive materials.
- When cutting or deburring pipes, do not allow cutting chips or other foreign matters to enter the pipes.
- If cutting chips or other foreign matters enter pipes, wipe them off the inside of the pipes.

Store the piping indoors, and keep both ends of the piping sealed until just before brazing.
(Leave elbow joints, etc. in their packaging.)

If dirt, dust or moisture enters into refrigerant cycle, that can cause deterioration of refrigerant oil or malfunction of compressor.

Use a vacuum pump with a reverse flow check valve.

Vacuum pump oil may flow back into refrigerant cycle and that can cause deterioration of refrigerant oil, etc.

Use the following tools specifically designed for use with R410A refrigerant.

The following tools are necessary to use R410A refrigerant.

Tools for R410A	
Gauge manifold	Flare tool
Charge hose	Size adjustment gauge
Gas leak detector	Vacuum pump adaptor
Torque wrench	Electronic refrigerant charging scale

Handle tools with care.

If dirt, dust or moisture enters into refrigerant cycle, that can cause deterioration of refrigerant oil or malfunction of compressor.

Do not use a charging cylinder.

If a charging cylinder is used, the composition of refrigerant will change and the efficiency will be lowered.

Ventilate the room if refrigerant leaks during operation. If refrigerant comes into contact with a flame, poisonous gases will be released.

The refrigerant oil applied to flare and flange connections must be ester oil, ether oil or alkylbenzene oil in a small amount.

If large amount of mineral oil enters, that can cause deterioration of refrigerant oil, etc.

Charge refrigerant from liquid phase of gas cylinder.

If the refrigerant is charged from gas phase, composition change may occur in refrigerant and the efficiency will be lowered.

Do not use refrigerant other than R410A.

If other refrigerant (R22, etc.) is used, chlorine in refrigerant can cause deterioration of refrigerant oil, etc.

Use the specified refrigerant only.

Never use any refrigerant other than that specified.
Doing so may cause a burst, an explosion, or fire when the unit is being used, serviced, or disposed of.
Correct refrigerant is specified in the manuals and on the spec labels provided with our products.
We will not be held responsible for mechanical failure, system malfunction, unit breakdown or accidents caused by failure to follow the instructions.

Do not pump down the system when a gas leak has been detected.

The intake of air or other gases causes abnormally high pressure in the refrigeration cycle, which may cause explosion or injury.

[1] Cautions for service

(1) Perform service after recovering the refrigerant left in unit completely.
(2) Do not release refrigerant in the air.
(3) After completing service, charge the cycle with specified amount of refrigerant.
(4) If moisture or foreign matter might have entered the refrigerant piping during service, ensure to remove them.

[2] Additional refrigerant charge

When charging directly from cylinder

(1) Check that cylinder for R410A on the market is a syphon type.
(2) Charging should be performed with the cylinder of syphon stood vertically. (Refrigerant is charged from liquid phase.)

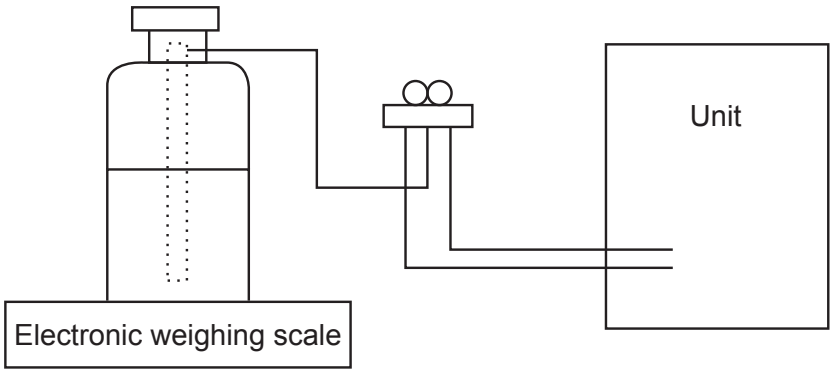

[3] Service tools

Use the below service tools as exclusive tools for R410A refrigerant.

No.	Tool name	Specifications
①	Gauge manifold	· Only for R410A
		· Use the existing fitting specifications. (UNF1/2)
		· Use high-tension side pressure of 768.7 PSIG [5.3 MPa.G] or over.
②	Charge hose	· Only for R410A
		· Use pressure performance of 738.2 PSIG [5.09 MPa.G] or over.
③	Electronic weighing scale	—
④	Gas leak detector	· Use the detector for R134a, R407C or R410A.
⑤	Adaptor for reverse flow check	· Attach on vacuum pump.
⑥	Refrigerant charge base	—
⑦	Refrigerant cylinder	· Only for R410A · Top of cylinder (Pink) · Cylinder with syphon
⑧	Refrigerant recovery equipment	—

Cautions for refrigerant piping work

New refrigerant R410A is adopted for replacement inverter series. Although the refrigerant piping work for R410A is same as for R22, exclusive tools are necessary so as not to mix with different kind of refrigerant. Furthermore as the working pressure of R410A is 1.6 times higher than that of R22, their sizes of flared sections and flare nuts are different.

Thickness of pipes

Because the working pressure of R410A is higher compared to R22, be sure to use refrigerant piping with thickness shown below. (Never use pipes of 7/256 in [0.7 mm] or below.)

① Diagram below: Piping diameter and thickness

Nominal dimensions (in)	Outside diameter (mm)	Thickness : in [mm]	
		R410A	R22
1/4	ø6.35	1/32 [0.8]	1/32 [0.8]
3/8	ø9.52	1/32 [0.8]	1/32 [0.8]
1/2	ø12.70	1/32 [0.8]	1/32 [0.8]
5/8	ø15.88	5/128 [1.0]	5/128 [1.0]
3/4	ø19.05	5/128 [1.0]*	5/128 [1.0]

*Use 1/2 H or H pipes.

② Dimensions of flare cutting and flare nut

The component molecules in HFC refrigerant are smaller compared to conventional refrigerants. In addition to that, R410A is a refrigerant, which has higher risk of leakage because its working pressure is higher than that of other refrigerants. Therefore, to enhance airtightness and strength, flare cutting dimension of copper pipe for R410A has been specified separately from the dimensions for other refrigerants as shown below. The dimension B of flare nut for R410A also has partly been changed to increase strength as shown below. Set copper pipe correctly referring to copper pipe flaring dimensions for R410A below. For 1/2 and 5/8 inch pipes, the dimension B changes.

Use torque wrench corresponding to each dimension.

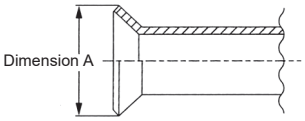

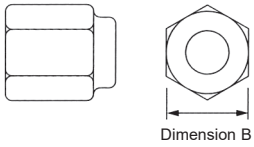

Flare cutting dimensions — Unit : in [mm]

Nominal dimensions (in)	Outside diameter (mm)	Dimension A ($^{0}_{-0.4}$)	
		R410A	R22
1/4	ø6.35	11/32-23/64 [9.1]	9.0
3/8	ø9.52	1/2-33/64 [13.2]	13.0
1/2	ø12.70	41/64-21/32 [16.6]	16.2
5/8	ø15.88	49/64-25/32 [19.7]	19.4
3/4	ø19.05	—	23.3

Flare nut dimensions — Unit: in [mm]

Nominal dimensions (in)	Outside diameter (mm)	Dimension B	
		R410A	R22
1/4	ø6.35	43/64 [17.0]	17.0
3/8	ø9.52	7/8 [22.0]	22.0
1/2	ø12.70	1-3/64 [26.0]	24.0
5/8	ø15.88	1-9/64 [29.0]	27.0
3/4	ø19.05	—	36.0

③ Tools for R410A (The following table shows whether conventional tools can be used or not.)

Tools and materials	Use	R410A tools	Can R22 tools be used?	Can R407C tools be used?
Gauge manifold	Air purge, refrigerant charge and operation check	Tool exclusive for R410A	×	×
Charge hose		Tool exclusive for R410A	×	×
Gas leak detector	Gas leak check	Tool for HFC refrigerant	×	○
Refrigerant recovery equipment	Refrigerant recovery	Tool exclusive for R410A	×	×
Refrigerant cylinder	Refrigerant charge	Tool exclusive for R410A	×	×
Applied oil	Apply to flared section	Ester oil, ether oil and alkylbenzene oil (minimum amount)	×	Ester oil, ether oil: ○ Alkylbenzene oil: minimum amount
Safety charger	Prevent compressor malfunction when charging refrigerant by spraying liquid refrigerant	Tool exclusive for R410A	×	×
Charge valve	Prevent gas from blowing out when detaching charge hose	Tool exclusive for R410A	×	×
Vacuum pump	Vacuum drying and air purge	Tools for other refrigerants can be used if equipped with adopter for reverse flow check	△ (Usable if equipped with adopter for reverse flow)	△ (Usable if equipped with adopter for reverse flow)
Flare tool	Flaring work of piping	Tools for other refrigerants can be used by adjusting flaring dimension	△ (Usable by adjusting flaring dimension)	△ (Usable by adjusting flaring dimension)
Bender	Bend the pipes	Tools for other refrigerants can be used	○	○
Pipe cutter	Cut the pipes	Tools for other refrigerants can be used	○	○
Welder and nitrogen gas cylinder	Weld the pipes	Tools for other refrigerants can be used	○	○
Refrigerant charging scale	Refrigerant charge	Tools for other refrigerants can be used	○	○
Vacuum gauge or thermistor vacuum gauge and vacuum valve	Check the degree of vacuum. (Vacuum valve prevents back flow of oil and refrigerant to thermistor vacuum gauge)	Tools for other refrigerants can be used	○	○
Charging cylinder	Refrigerant charge	Tool exclusive for R410A	×	—

× : Prepare a new tool. (Use the new tool as the tool exclusive for R410A.)
△ : Tools for other refrigerants can be used under certain conditions.
○ : Tools for other refrigerants can be used.

2 OVERVIEW OF UNITS

2-1. Auxiliary HEATING ON/OFF CONTROL SET-UP

(1) Auxiliary heating operation controls another heat source that depends on the main system's operations,which means the interlock operation shown in "b)" will be possible.

a) Indoor unit must be R410A UL model for this function to operate.

b) Different Indoor unit applications that can be applied:

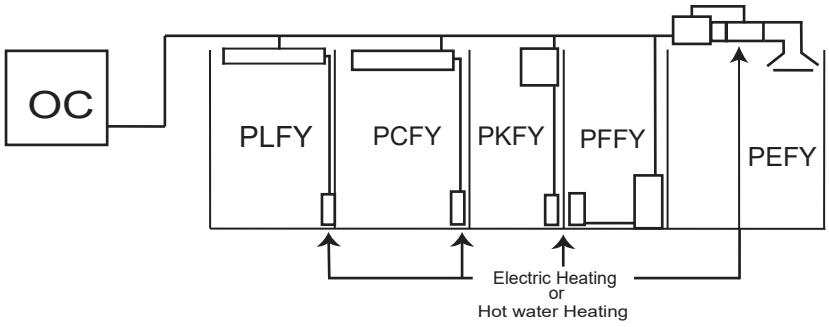

(2) **Outdoor unit DIPSW5-4 for auxiliary heating control:**

Set DIPSW5-4 when power is turned off at unit.

OFF: Disable auxiliary Heating Function (Initial setting)

ON: Enable auxiliary Heating Function

(3) **Determine required indoor fan speed during defrost mode:**

To set the fan speed, see the chapter referring to heater control in the indoor unit's Technical & Service Manual.

(4) Determine fan speed setting during indoor thermo-OFF conditions:

a) These settings are done within Indoor DIPSW1-7 and DIPSW1-8, see chart below for options.

b) Recommended SW1-7 OFF and SW1-8 ON will determine airflow based on "Setting on the remote controller".

Auxiliary heating signal		Fan speed setting	Fan speed setting
Thermo contidion		OFF	ON
SW1-7	SW1-8		
OFF	OFF	Very low	Setting on remote controller
ON	OFF	Low	
OFF	ON	Setting on remote controller	
ON	ON	Stopped	

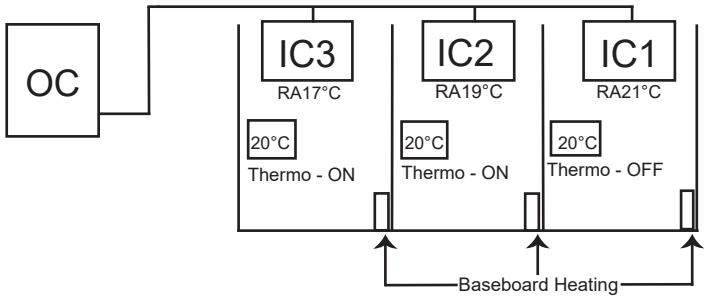

(5) Setting outdoor unit and auxiliary heat switch over temperatures

When the DIPSW 5-4 is set to "ON", the outdoor unit and the contact output operates as shown below.

a)Outdoor default setting and operations are shown below:

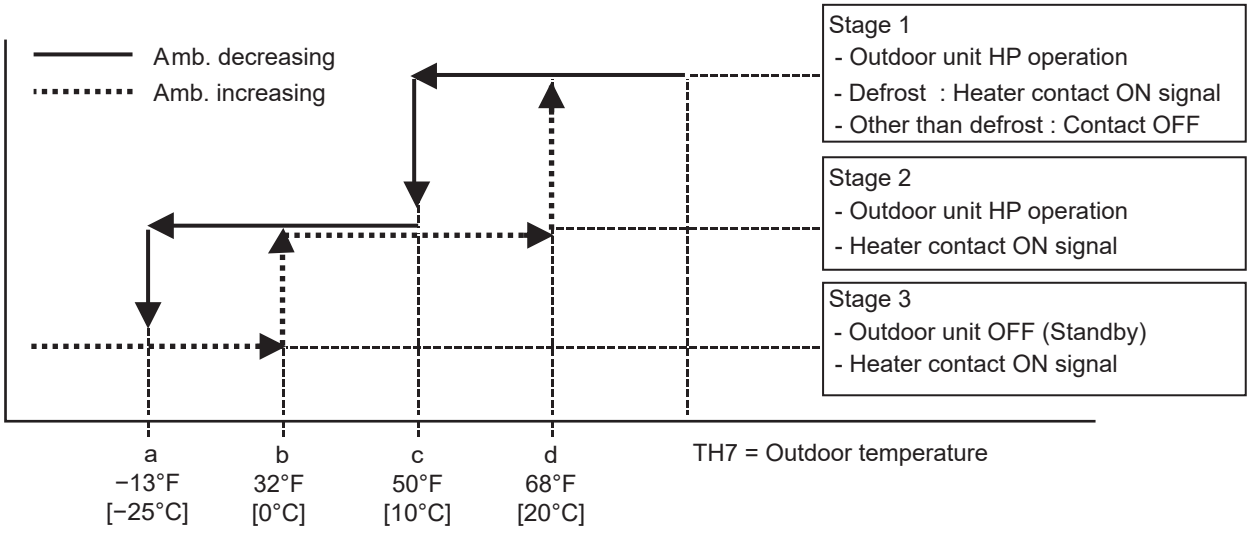

When the set temperature ranges overlap, the previously set pattern (1, 2 or 3) has a priority.
The stage 1 has the highest priority, 2 the second and then 3.

b) Based on above chart listed the sequence of operation on "On ambient decrease"

Stage 1: (TH7 ≥ 50°F [10˚C]): the outdoor unit runs in HP mode.
Stage 2: (TH7 = 50 to −13°F [10 to −25˚C]): the outdoor unit runs in HP mode with auxiliary heating.
Stage 3: (TH7 ≤ −13°F [−25˚C]): Auxiliary heating only (Outdoor unit is OFF).

c) Based on above chart listed the sequence of operation on "On ambient increase"

Stage 3: (TH7 ≤ 32°F [0˚C]): Auxiliary heating only (Outdoor unit is OFF).
Stage 2: (TH7 ≥ 32 to 68˚F [0 to 20˚C]): Auxiliary heating with outdoor unit in HP mode.
Stage 1: (TH7 ≥ 68˚F [20˚C]): Outdoor unit in HP mode only.

(6) Locally procured wiring

A basic connection method is shown.

(i.e. interlocked operation with the electric heater with the fan speed setting on high)

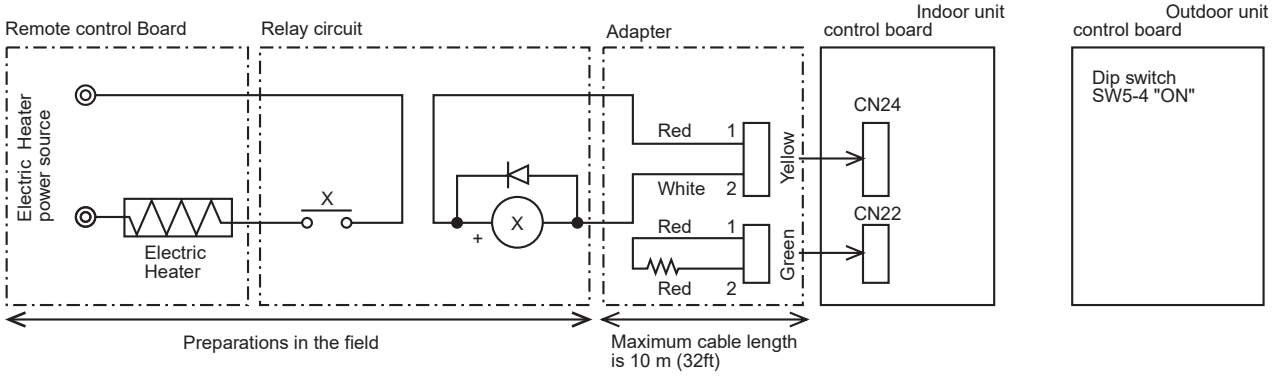

For relay X use the specifications given below operation coil

Rated voltage: 12 V DC

Power consumption: 0.9 W or less

*Use the diode that is recommended by the relay manufacturer at both ends of the relay coil.

The length of the electrical wiring for the PAC-YU24HT is 2 meters (6-1/2 ft)

To extend this length, use sheathed 2-core cable.

Control cable type: CVV, CVS, CPEV, or equivalent.

Cable size: 0.5 mm^2 to 1.25 mm^2 (AWG22 to AWG16)

Do not extend the cable more than 10 meters (32 ft).

Recommended circuit

Wiring diagram

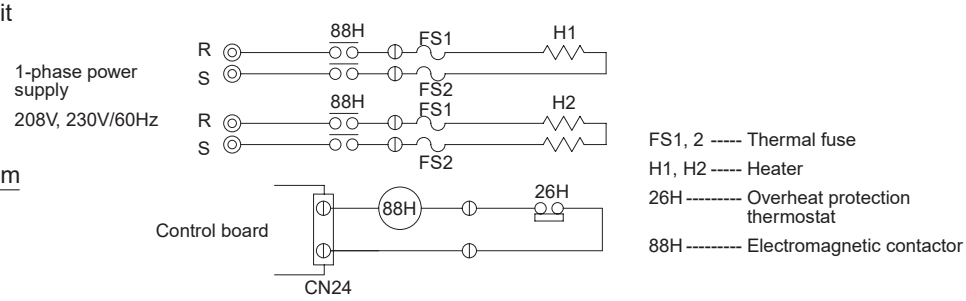

2-2. SYSTEM CONSTRUCTION

Outdoor unit		4HP	4.5HP	5HP	7HP
		SM36NAM2 SM36NAMHZ2	SM42NAMHZ2	SM48NAM2 SM48NAMHZ2	SM60NAM2
Applicable indoor unit	Capacity	04 to 36	04 to 54		04 to 72
	Number of units	1 to 11	1 to 12		
	Total system capacity range	50 to 130% of outdoor unit capacity			

Model name	CMY-Y62-G-E	CMY-Y64-G-E	CMY-Y68-G-E
Number of branches	2	4	8

Connectable indoor unit lineup

Model type		Model name		04	05	06	08	12	15	18	24	27	30	36	48	54	72
Ceiling Cassette	4-way flow	PLFY-EP	NEMU-E					●	●	●	●		●	●	●		
	2 by 2	PLFY-P	NFMU-E		●		●	●	●	●							
	1-way flow	PMFY-P	NBMU-E			●	●	●	●								
Ceiling Concealed		PEFY-P	NMAU-E			●	●	●	●	●	●	●	●	●	●	●	
			NMSU-E			●	●	●	●	●	●						
			NMHU-E						●	●	●	●	●	●	●	●	
			NMHSU-E														●*
Wall Mounted		PKFY-P	NKMU-E								●		●				
			NLMU-E	●		●	●	●	●	●							
Ceiling Suspended		PCFY-P	NKMU-E						●		●		●	●			
Floor standing	Exposed	PFFY-P	NEMU-E			●	●	●	●	●	●						
	Concealed		NRMU-E			●	●	●	●	●	●						
Multi-position air handling unit		PVFY-P	NAMU-E				●	●		●	●		●	●	●	●	

* Only MXZ-SM60 is connectable.

Remote controller	Name	M-NET remote controller	MA remote controller
	Model number	PAR-F27MEA-E, PAR-U01MEDU	PAR-21MAA, PAR-41MAA
	Functions	• A handy remote controller for use in conjunction with the Melans centralized management system. • Addresses must be set.	• Addresses setting is not necessary.

2-3 SYSTEM CONSTRUCTION(BRANCH BOX SYSTEM)

Outdoor unit	Model name	SM36NAM2 SM36NAMHZ2	SM42NAMHZ2	SM48NAM2 SM48NAMHZ2	SM60NAM2
	Horse power	4HP	4.5HP	5HP	7HP
Applicable indoor unit	Capacity class	Type 06 to Type 36 Caution: The indoor unit which rated capacity exceeds 36 kBtu/ h (Type 36) can NOT be connected.			
	Number of units	2(*1) to 4	2(*1) to 5	2(*1) to 8	2(*1) to 8
	Total system capacity range	33 to 130% of outdoor unit capacity	29 to 130% of outdoor unit capacity	25 to 130% of outdoor unit capacity	20 to 130% of outdoor unit capacity
		12 to 46.8 kBtu/h	12 to 54.6 kBtu/h	12 to 62.4 kBtu/h	12 to 78 kBtu/h
Branch box that can be connected	Number of units	1 or 2			

Connectable indoor unit lineups (Heat pump inverter type)										
Model type		Model name	06	09	12	15	18	24	30	36
Wall-mounted	Deluxe	MSZ-FH06/09/12/15NA, 18NA MSZ-FS•NA	●	●	●	●	●			
	Designer	MSZ-EF•NA(W/B/S)		●	●	●	●			
	Standard	MSZ-GL•NA MSZ-GS•NA	●	●	●	●	●	●		
Ducted	Low static*3 *4	SEZ-KD•NA		●	●	●	●			
	P-series mid static*3 *4	PEAD-A•AA		●	●	●	●	●	●	●
1-way ceiling cassette		MLZ-KY06NA*6 MLZ-KP09/12/18NA	●	●	●		●			
4-way ceiling cassette	P-series 22*22	SLZ-KF•NA		●	●	●				
	P-series 33*33	PLA-A•EA*5			●		●	●	●	●
Floor standing		MFZ-KJ•NA		●	●	●	●			
Standard Multi-position air handler*2		SVZ-KP•NA			●		●	●	●	●
A-coil		PAA-A•A *5					●	●	●	●

Branch box	PAC-MKA52/53BC	PAC-MKA32/33BC
Number of branches (Indoor unit that can be connected)	5 (MAX. 5 units)	3 (MAX. 3 units)

Note: A maximum of 2 branch boxes can be connected to 1 outdoor unit.

2- branch pipe (joint), Optional parts	Model name	Note
Using 1 branch box	No required	
Using 2 branch boxes	MSDD-50AR-E	Connection method: flare
	MSDD-50BR-E	Connection method: brazing

Note:Select a model according to the connection method.

Option	Optional accessories for indoor units and outdoor units are available.

*1 Only one unit connection is possible with ducted unit.
*2 When connecting a multi-position unit(s), set additional constraints as follows. For connections other than those specified below, consult your dealer.

● **Models other than MXZ-SM60NAM2** (For each connected branch box)

Number of connecting multi-position unit	Constraints
2	Any indoor units other than ducted units are not connectable.
1	· The total system wide capacity should be 130% or below including the ducted unit. · Only 1 ducted unit can be included in the connection.

● **MXZ-SM60NAM2** (For each connected branch box)

Number of connecting multi-position unit	Constraints
2	Any indoor units other than ducted unit are not connectable.
1	· The total system wide capacity should be 100% or below including the ducted unit. · Only 1 ducted unit can be included in the connection.

*3 For MXZ-SM60NAM2; When connecting the SEZ and PEAD-series units, the total system wide capacity per 1 branch box should be 100% or below including the ducted units. (Only if connecting to branch box)
*4 When not outside units 60: A branch box can connect to maximum 3 of the ducted units. When connecting with 3 of the ducted units per 1 branch box, other indoor units cannot be connected.
When outside units 60: A branch box can connect to maximum 2 of the ducted units. When connecting with 1 and over 1 of the ducted units, the total ability including of the ducted units is 100% and below 100%.
*5 When 1 or more PLA-A•EA or PAA-A•A units is connected, the number of the maximum connectable indoor units is decreased as follows:
3 for MXZ-SM36NAM(HZ)2, 4 for MXZ-SM42NAMHZ2, and 6 for MXZ-SM48NAM(HZ)2 and MXZ-SM60NAM2
*6 Only MXZ-SM36/42/48 are connectable.

2-4. SYSTEM SPECIFICATIONS

(1) Outdoor Unit

Outdoor unit	Model name	SM36NAM2	SM36NAMHZ2	SM42NAMHZ2	SM48NAM2	SM48NAMHZ2	SM60NAM2
Capacity	Cooling (kBtu/h)	36		42	48		60
	Heating (kBtu/h)	41	42	48	50	54	66

Cooling/Heating capacity indicates the maximum value at operation under the following condition.

Cooling Indoor D.B. 80°F/W.B. 67°F: [D.B. 26.7°C/W.B. 19.4°C]
Outdoor D.B. 95°F/W.B. 75°F: [D.B. 35°C/W.B. 23.9°C]
Heating Indoor D.B. 70°F/W.B. 60°F: [D.B. 21.1°C/W.B. 15.6°C]
Outdoor D.B. 47°F/W.B. 43°F: [D.B. 8.3°C/W.B. 6.1°C]

(2) Method for identifying

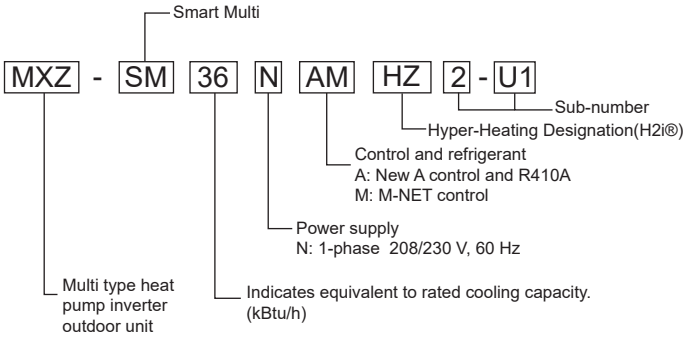

3 SPECIFICATIONS

Service Ref.			MXZ-SM36NAM2-U1			MXZ-SM48NAM2-U1		
Indoor type			Non-Ducted	Mix	Ducted	Non-Ducted	Mix	Ducted
Cooling	Capacity Rated*1	Btu/h	36,000	36,000	36,000	48,000	48,000	48,000
	Rated power consumption*1	W	2,400	2,740	3,190	3,665	4,090	4,615
	Current input (208/230V)	A	11.7/10.6	13.4/12.1	15.6/14.1	17.9/16.2	20.0/18.1	22.5/20.4
	EER2	Btu/h/W	15.00	13.15	11.30	13.10	11.75	10.40
	SEER2	-	23.00	19.30	15.60	23.00	18.85	14.70
Heating	Capacity Rated 47°F*1	Btu/h	41,000	41,000	41,000	50,000	50,000	50,000
	Capacity Max. 17°F*2	Btu/h	36,000	36,000	36,000	43,000	43,000	43,000
	Capacity Max. 5°F	Btu/h	29,000	29,000	29,000	35,400	35,400	35,400
	Rated power consumption 47°F*1	W	3,005	3,250	3,535	3,665	4,075	4,580
	Current input (208/230V)	A	14.7/13.3	15.9/14.3	17.3/15.6	17.9/16.2	19.9/18.0	22.4/20.2
	COP 47°F*1	W/W	4.00	3.70	3.40	4.00	3.60	3.20
	HSPF2 / V	-	11.00/8.75	9.80/8.05	8.60/7.40	10.40/8.35	9.35/7.90	8.30/7.50
Power supply			1-phase 208/230 V, 60 Hz					
Breaker Size/Maximum over current protection			30 A/64 A (When power is supplied separately) 40 A/70 A (When power is supplied from the outdoor unit)					
Minimum circuit ampacity			36 A (When power is supplied separately) 42 A (When power is supplied from the outdoor unit)					
Indoor unit connectable	Total capacity		50 to 130% of outdoor unit capacity					
	Model/Quantity *3	CITY MULTI	04 - 36/11			04 - 54/12		
		Branch box	06 - 36/4			06 - 36/8		
Sound pressure level (measured in anechoic room)		dB <A>	49/53			51/54		
Refrigerant piping diameter	Liquid pipe	inch (mm)	3/8 (ø9.52)					
	Gas pipe	inch (mm)	5/8 (ø15.88)					
Fan	Type × Quantity		Propeller fan × 2					
	Airflow rate	m³/min	110					
		L/s	1,834					
		cfm	3,885					
	Control, Driving mechanism		DC control					
	Motor output	kW	0.074 × 2					
	External static press.		0					
Compressor	Type × Quantity		Scroll hermetic compressor x 1					
	Manufacture		Mitsubishi Electric Corporation					
	Starting method		Inverter					
	Motor output	kW	2.8			3.4		
	Case heater	kW	0					
	Lubricant		FV50S 78oz. (2.3L)					
External finish			Galvanized Steel Sheet <Munsell 3Y 7.8/ 1.1>					
External dimension H × W × D		mm	1,338 × 1,050 × 330 (+25)					
		inch	52-11/16 × 41-11/32 × 13 (+1)					
Protection devices	High pressure protection		High pressure switch					
	Inverter circuit (COMP./FAN)		Overcurrent detection, Overheat detection (Heat sink thermistor)					
	Compressor protection		Compressor thermo, Overcurrent detection					
	Fan motor protection		Overheating/Voltage protection					
Refrigerant	Type × original charge		R410A 10 lbs. 9 oz. (4.8kg)					
	Control		Linear Expansion Valve					
Net weight		lb (kg)	271 (123)					
Heat exchanger			Cross fin and tube					
HIC circuit (HIC: Heat Inter-Changer)			HIC circuit					
Defrosting method			Reversed refrigerant circuit					
Guaranteed operation range		(Cooling)	D.B 23 to 115°F [D.B.-5 to 46°C] *4*5*6					
		(Heating)	W.B. -13 to 59°F [W.B. -25 to 15°C]					
Remarks			Details on foundation work, duct work, insulation work, electrical wiring, power source switch, and other items shall be referred to the Installation Manual. Due to continuing improvement, above specifications may be subject to change without notice.					

*1 Rating conditions Cooling Indoor : D.B. 80°F/W.B. 67 °F [D.B.26.7°C/W.B. 19.4°C]
Outdoor : D.B. 95°F [D.B. 35.0°C]
Heating Indoor : D.B. 70°F [D.B. 21.1°C]
Outdoor : D.B. 47°F/W.B. 43°F [D.B. 8.3°C/W.B. 6.1°C]

*2 Conditions Heating Indoor : D.B. 70°F [D.B. 21.1°C]
Outdoor : D.B. 17°F/W.B. 15°F [D.B. −8.3°C/W.B. −9.4°C]

Conversion formula:	kcal/h = kW × 860 Btu/h = kW × 3412 CFM = m³/min × 35.31

*3 It cannot be connected mixed CITY MULTI indoor unit and branch box indoor unit.
*4 D.B. 5 to 115°F [D.B. -15 to 46°C], when an optional Air Outlet Guide is installed.
However, this condition does not apply to the indoor units listed in *5.
*5 50 to 115°F (10 to 46°C) D.B.: When connecting PKFY-P04/06/08/12NLMU, PFFY-P06/08/12NEMU, and PFFY-P06/08/12NRMU type indoor unit.
*6 When the temperature is below D.B. 50°F [D.B. 10°C] with branch box system, noise could potentially occur.
Note: Refer to the indoor unit's service manual for the indoor units specifications.

Service Ref.			MXZ-SM36NAMHZ2-U1			MXZ-SM42NAMHZ2-U1			MXZ-SM48NAMHZ2-U1		
Indoor type			Non-Ducted	Mix	Ducted	Non-Ducted	Mix	Ducted	Non-Ducted	Mix	Ducted
Cooling	Capacity Rated*1	Btu/h	36,000	36,000	36,000	42,000	42,000	42,000	48,000	48,000	48,000
	Rated power consumption*1	W	2,400	2,740	3,190	3,135	3,500	3,965	3,665	4,090	4,615
	Current input (208/230V)	A	11.7/10.6	13.4/12.1	15.6/14.1	15.3/13.8	17.1/15.4	19.4/17.5	17.9/16.2	20.0/18.1	22.5/20.4
	EER2	Btu/h/W	15.00	13.15	11.30	13.40	12.00	10.60	13.10	11.75	10.40
	SEER2	-	23.00	19.30	15.60	21.50	18.85	14.70	23.00	18.85	14.70
Heating	Capacity Rated 47°F*1	Btu/h	42,000	42,000	42,000	48,000	48,000	48,000	54,000	54,000	54,000
	Capacity Max. 17°F*2	Btu/h	42,000	42,000	42,000	48,000	48,000	48,000	54,000	54,000	54,000
	Capacity Max. 5°F	Btu/h	38,500	38,500	38,500	44,000	44,000	44,000	47,000	47,000	47,000
	Rated power consumption 47°F*1	W	3,080	3,330	3,620	3,435	3,805	4,265	3,960	4,400	4,950
	Current input (208/230V)	A	15.0/13.6	16.3/14.7	17.7/16.0	16.8/15.2	18.6/16.8	20.8/18.8	19.3/17.5	21.5/19.4	24.2/21.8
	COP 47°F*1	W/W	4.00	3.70	3.40	4.10	3.70	3.30	4.00	3.60	3.20
	HSPF2 Ⅳ/Ⅴ	-	12.00/10.65	10.95/9.70	9.90/8.80	11.10/9.80	10.10/9.30	9.10/8.80	11.50/9.80	10.15/9.05	8.80/8.30
Power supply			1-phase 208/230 V, 60 Hz								
Breaker Size/Maximum over current protection			40 A/80 A (When power is supplied separately) 45 A/86 A (When power is supplied from the outdoor unit)								
Minimum circuit ampacity			45 A (When power is supplied separately) 51 A (When power is supplied from the outdoor unit)								
Indoor unit connectable	Total capacity		50 to 130% of outdoor unit capacity								
	Model/Quantity *3	CITY MULTI	04 - 36/11			04 - 54/12			04 - 54/12		
		Branch box	06 - 36/4			06 - 36/5			06 - 36/8		
Sound pressure level (measured in anechoic room)		dB <A>	49/53			50/54			51/54		
Refrigerant piping diameter	Liquid pipe	inch (mm)	3/8 (ø9.52)								
	Gas pipe	inch (mm)	5/8 (ø15.88)								
Fan	Type × Quantity		Propeller fan × 2								
	Airflow rate	m³/min	110								
		L/s	1,834								
		cfm	3,885								
	Control, Driving mechanism		DC control								
	Motor output	kW	0.074 × 2								
	External static press.		0								
Compressor	Type × Quantity		Scroll hermetic compressor × 1								
	Manufacture		Mitsubishi Electric Corporation								
	Starting method		Inverter								
	Motor output	kW	2.8			2.9			3.4		
	Case heater	kW	0								
	Lubricant		FV50S 78oz. (2.3L)								
External finish			Galvanized Steel Sheet <Munsell 3Y 7.8/ 1.1>								
External dimension H × W × D		mm	1,338 × 1,050 × 330 (+25)								
		inch	52-11/16 × 41-11/32 × 13 (+1)								
Protection devices	High pressure protection		High pressure switch								
	Inverter circuit (COMP./FAN)		Overcurrent detection, Overheat detection (Heat sink thermistor)								
	Compressor protection		Compressor thermo, Overcurrent detection								
	Fan motor protection		Overheating/Voltage protection								
Refrigerant	Type x original charge		R410A 10 lbs. 9 oz. (4.8kg)								
	Control		Linear Expansion Valve								
Net weight		lb (kg)	278 (126)								
Heat exchanger			Cross fin and tube								
HIC circuit (HIC: Heat Inter-Changer)			HIC circuit								
Defrosting method			Reversed refrigerant circuit								
Guaranteed operation range		(Cooling)	D.B 23 to 115°F [D.B.-5 to 46°C] *4*5*6								
		(Heating)	W.B. -13 to 59°F [W.B. -25 to 15°C]								
Remarks			Details on foundation work, duct work, insulation work, electrical wiring, power source switch, and other items shall be referred to the Installation Manual. Due to continuing improvement, above specifications may be subject to change without notice.								

*1 Rating conditions Cooling Indoor : D.B. 80°F/W.B. 67 °F [D.B.26.7°C/W.B. 19.4°C]
Outdoor : D.B. 95°F [D.B. 35.0°C]
Heating Indoor : D.B. 70°F [D.B. 21.1°C]
Outdoor : D.B. 47°F/W.B. 43°F [D.B. 8.3°C/W.B. 6.1°C]

*2 Conditions Heating Indoor : D.B. 70°F [D.B. 21.1°C]
Outdoor : D.B. 17°F/W.B. 15°F [D.B. −8.3°C/W.B. −9.4°C]

Conversion formula:	kcal/h	= kW × 860
	Btu/h	= kW × 3412
	CFM	= m³/min × 35.31

*3 It cannot be connected mixed CITY MULTI indoor unit and branch box indoor unit.
*4 D.B. 5 to 115°F [D.B. -15 to 46°C], when an optional Air Outlet Guide is installed.
However, this condition does not apply to the indoor units listed in *5.
*5 50 to 115°F (10 to 46°C)D.B.: When connecting PKFY-P04/06/08/12NLMU, PFFY-P06/08/12NEMU, and PFFY-P06/08/12NRMU type indoor unit.
*6 When the temperature is below D.B. 50°F [D.B. 10°C] with branch box system, noise could potentially occur.
Note: Refer to the indoor unit's service manual for the indoor units specifications.

Service Ref.			MXZ-SM60NAM2-U1		
Indoor type			Non-Ducted	Mix	Ducted
Cooling	Capacity Rated*1	Btu/h	60,000	60,000	60,000
	Rated power consumption*1	W	4,515	5,065	5,770
	Current input (208/230V)	A	21.9/19.8	24.6/22.3	28.0/25.4
	EER2	Btu/h/W	13.30	11.85	10.40
	SEER2	-	20.00	17.75	15.50
Heating	Capacity Rated 47°F*1	Btu/h	66,000	66,000	66,000
	Capacity Max. 17°F*2	Btu/h	65,000	65,000	65,000
	Capacity Max. 5°F	Btu/h	46,500	46,500	46,500
	Rated power consumption 47°F*1	W	4,720	5,175	5,690
	Current input (208/230V)	A	22.9/20.7	25.2/22.8	27.7/25.0
	COP 47°F*1	W/W	4.10	3.74	3.40
	HSPF2 Ⅳ/Ⅴ	-	10.50/8.65	9.55/8.05	8.60/7.45
Power supply			1-phase 208/230 V, 60 Hz		
Breaker Size/Maximum over current protection			40 A/80 A (When power is supplied separately) 50 A/90 A (When power is supplied from the outdoor unit)		
Minimum circuit ampacity			45 A (When power is supplied separately) 55 A (When power is supplied from the outdoor unit)		
Indoor unit connectable	Total capacity		50 to 130% of outdoor unit capacity		
	Model/Quantity*3	CITY MULTI	04 - 72 /12		
		Branch box	06 - 36 / 8		
Sound pressure level (measured in anechoic room)		dB <A>	58/59		
Refrigerant piping diameter	Liquid pipe	inch (mm)	3/8 (ø9.52)		
	Gas pipe	inch (mm)	3/4 (ø19.05)		
Fan	Type × Quantity		Propeller fan × 2		
	Airflow rate	m³/min	138		
		L/s	2,300		
		cfm	4,879		
	Control, Driving mechanism		DC control		
	Motor output	kW	0.200 × 2		
	External static press.		0		
Compressor	Type × Quantity		Scroll hermetic compressor x 1		
	Manufacture		Mitsubishi Electric Corporation		
	Starting method		Inverter		
	Motor output	kW	3.9		
	Case heater	kW	0		
	Lubricant		FVC68D 78oz. (2.3L)		
External finish			Galvanized Steel Sheet <Munsell 3Y 7.8/ 1.1>		
External dimension H × W × D		mm	1,338 × 1,050 × 330 (+25)		
		inch	52-11/16 × 41-11/32 × 13 (+1)		
Protection devices	High pressure protection		High pressure switch		
	Inverter circuit (COMP./FAN)		Overcurrent detection, Overheat detection(Heat sink thermistor)		
	Compressor protection		Compressor thermo, Overcurrent detection		
	Fan motor protection		Overheating/Voltage protection		
Refrigerant	Type x original charge		R410A 11 lbs. 4 oz. (5.1kg)		
	Control		Linear Expansion Valve		
Net weight		lb (kg)	300 (136)		
Heat exchanger			Cross fin and tube		
HIC circuit (HIC: Heat Inter-Changer)			HIC circuit		
Defrosting method			Reversed refrigerant circuit		
Guaranteed operation range		(Cooling)	D.B 23 to 115°F [D.B.-5 to 46°C] *4*5*6		
		(Heating)	W.B. -13 to 59°F [W.B. -25 to 15°C]		
Remarks			Details on foundation work, duct work, insulation work, electrical wiring, power source switch, and other items shall be referred to the Installation Manual. Due to continuing improvement, above specifications may be subject to change without notice.		

*1 Rating conditions Cooling Indoor : D.B. 80°F/W.B. 67 °F [D.B.26.7°C/W.B. 19.4°C]
Outdoor : D.B. 95°F [D.B. 35.0°C]
Heating Indoor : D.B. 70°F [D.B. 21.1°C]
Outdoor : D.B. 47°F/W.B. 43°F [D.B. 8.3°C/W.B. 6.1°C]

*2 Conditions Heating Indoor : D.B. 70°F [D.B. 21.1°C]
Outdoor : D.B. 17°F/W.B. 15°F [D.B. −8.3°C/W.B. −9.4°C]

Conversion formula:	kcal/h = kW × 860 Btu/h = kW × 3412 CFM = m³/min × 35.31

*3 It cannot be connected mixed CITY MULTI indoor unit and branch box indoor unit.
*4 D.B. 5 to 115°F [D.B. -15 to 46°C], when an optional Air Outlet Guide is installed.
However, this condition does not apply to the indoor units listed in *5.
*5 50 to 115°F (10 to 46°C) D.B.: When connecting PKFY-P04/06/08/12NLMU, PFFY-P06/08/12NEMU, and PFFY-P06/08/12NRMU type indoor unit.
*6 When the temperature is below D.B. 50°F [D.B. 10°C] with branch box system, noise could potentially occur.
Note: Refer to the indoor unit's service manual for the indoor units specifications.

4-1. SELECTION OF COOLING/HEATING UNITS

How to determine the capacity when less than or equal 100% indoor model size units are connected in total:

The purpose of this flow chart is to select the indoor and outdoor units. For other purposes, this flow chart is intended only for reference.

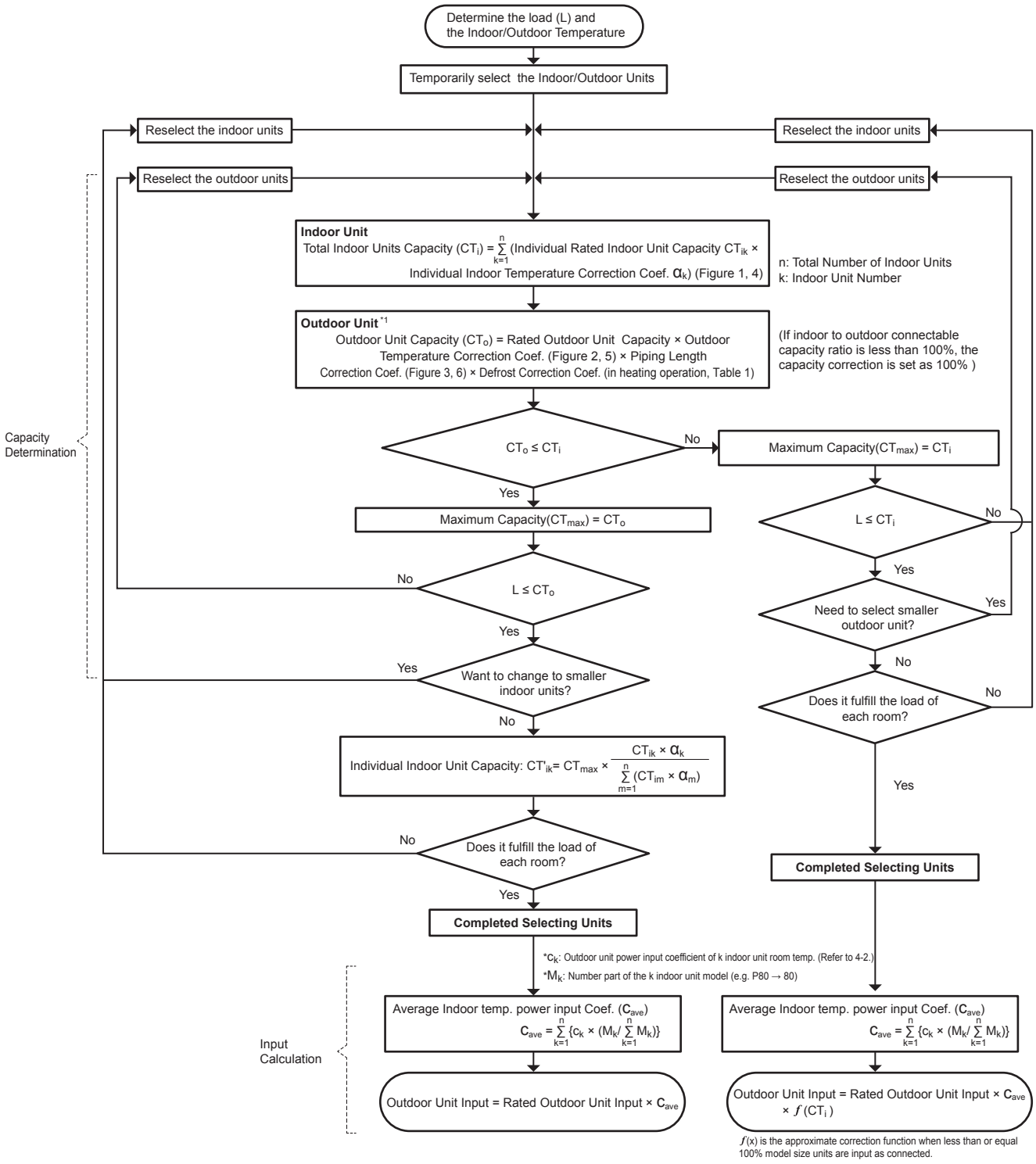

How to determine the capacity when greater than 100% indoor model size units are connected in total:

The purpose of this flow chart is to select the indoor and outdoor units. For other purposes, this flow chart is intended only for reference.

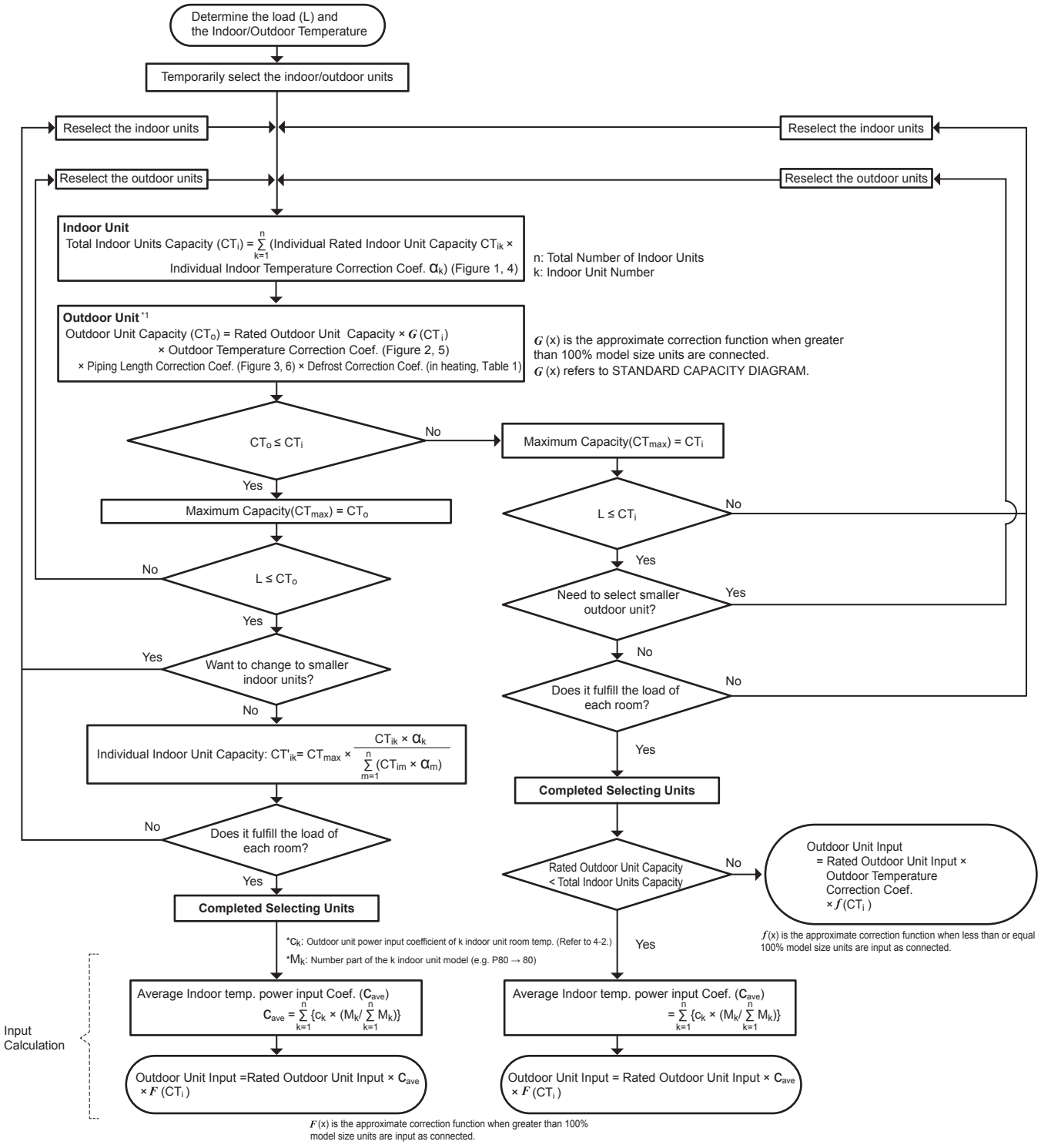

<Cooling>

Design Condition	
Outdoor Design Dry Bulb Temperature	**98.6ºF (37.0ºC)**
Total Cooling Load	**30.3 kBtu/h**
Room1	
Indoor Design Dry Bulb Temperature	**80.6ºF (27.0ºC)**
Indoor Design Wet Bulb Temperature	**68.0ºF (20.0ºC)**
Cooling Load	**13.6 kBtu/h**
Room2	
Indoor Design Dry Bulb Temperature	**75.2ºF (24.0ºC)**
Indoor Design Wet Bulb Temperature	**66.2ºF (19.0ºC)**
Cooling Load	**16.7 kBtu/h**
<Other>	
Indoor/Outdoor Equivalent Piping Length	**250 ft**

Capacity of indoor unit

(kBtu/h)

<P•FY series>

Model Number for indoor unit	Model 04	Model 05	Model 06	Model 08	Model 12	Model 15	Model 18	Model 24	Model 27	Model 30	Model 36	Model 48	Model 54	Model 72
Model Capacity	4.0	5.0	6.0	8.0	12.0	15.0	18.0	24.0	27.0	30.0	36.0	48.0	54.0	72.0

<M,S,P series>

Model name	Capacity class							
	06	09	12	15	18	24	30	36
SVZ	-	-	12.0	-	18.0	24.0	30.0	36.0
SLZ-KF	-	8.4	11.1	15.0	-	-	-	-
SEZ-KD	-	8.1	11.5	14.1	17.2	-	-	-
MFZ-KJ	-	9.0	12.0	15.0	17.0	-	-	-
MLZ-KP	-	9.0	12.0	-	17.2	-	-	-
MLZ-KY	6.0	-	-	-	-	-	-	-
MSZ-FH	6.0	9.0	12.0	15.0	17.2	-	-	-
MSZ-FS	6.0	9.0	12.0	15.0	17.2	-	-	-
MSZ-GL	6.0	9.0	12.0	14.0	17.2	22.5	-	-
MSZ-GS	6.0	9.0	12.0	14.0	18.0	22.4	-	-
MSZ-EF	-	9.0	12.0	15.0	18.0	-	-	-
PEAD	-	9.0	12.0	15.0	18.0	24.0	30.0	36.0
PLA	-	-	12.0	-	18.0	24.0	30.0	36.0
PAA-A	-	-	-	-	18.0	24.0	30.0	36.0

1. Cooling Calculation

(1) Temporary Selection of Indoor Units

Room1

PEFY-P15 **15.0 kBtu/h (Rated)**

Room2

PEFY-P18 **18.0 kBtu/h (Rated)**

(2) Total Indoor Units Capacity

P15+ P18 = P33

(3) Selection of Outdoor Unit

The P36 outdoor unit is selected as total indoor units capacity is P33

MXZ-SM36NAM2 **36.0 kBtu/h**

(4) Total Indoor Units Capacity Correction Calculation

Room1

Indoor Design Wet Bulb Temperature Correction (68.0ºF) 1.02 (Refer to Figure 1)

Room2

Indoor Design Wet Bulb Temperature Correction (66.2ºF) 0.95 (Refer to Figure 1)

Total Indoor Units Capacity (CTi)

CTi = Σ (Indoor Unit Rating × Indoor Design Temperature Correction)

= 15.0 × 1.02 + 18.0 × 0.95

= 32.4 kBtu/h

(5) Outdoor Unit Correction Calculation

Outdoor Design Dry Bulb Temperature Correction (98.6ºF) 0.98 (Refer to Figure 2)

Piping Length Correction (250 ft) 0.93 (Refer to Figure 3)

Total Outdoor Unit Capacity (CTo)

CTo = Outdoor Rating × G(CTi)*1 × Outdoor Design Temperature Correction × Piping Length Correction

= 36.0 × 0.98 × 0.93

= 32.8 kBtu/h

*1 G(CTi) is used only when greater than 100% indoor model size are connected in total, refer to STANDARD CAPACITY DIAGRAM.

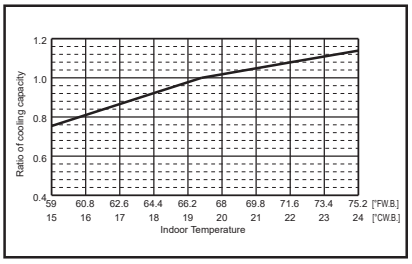

Figure 1 **Indoor unit temperature correction**
To be used to correct indoor unit only

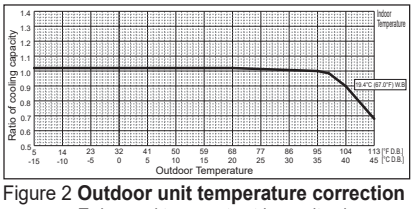

Figure 2 **Outdoor unit temperature correction**
To be used to correct outdoor unit only

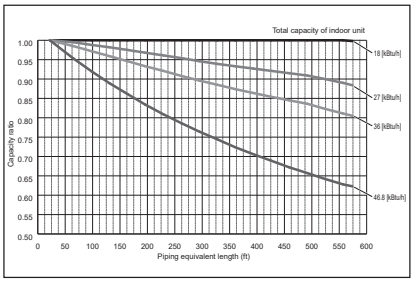

Figure 3 **Correction of refrigerant piping length**

(6) Determination of Maximum System Capacity

Comparison of Capacity between Total Indoor Units Capacity (CTi) and Total Outdoor Unit Capacity (CTo)

CTi = 32.4 < CTo = 32.8, thus, select CTi.

CTx = CTi = 32.4 kBtu/h

(7) Comparison with Essential Load

Against the essential load 30.3 kBtu/h, the maximum system capacity is 32.4 kBtu/h: Proper outdoor units have been selected.

(8) Calculation of Maximum Indoor Unit Capacity of Each Room

CTx = CTi, thus, calculate by the calculation below

Room1

Indoor Unit Rating × Indoor Design Temperature Correction

= 15.0 × 1.02

= 15.3 kBtu/h **OK: fulfills the load 13.6 kBtu/h**

Room2

Indoor Unit Rating × Indoor Design Temperature Correction

= 18.0 × 0.95

= 17.1 kBtu/h **OK: fulfills the load 16.7 kBtu/h**

Go on to the heating trial calculation since the selected units fulfill the cooling loads of Room 1, 2.

<Heating>

Design Condition	
Outdoor Design Wet Bulb Temperature	**35.6ºF (2.0ºC)**
Total Heating Load	**34.0 kBtu/h**
Room1	
Indoor Design Dry Bulb Temperature	**69.8ºF (21.0ºC)**
Heating Load	**16.3 kBtu/h**
Room2	
Indoor Design Dry Bulb Temperature	**73.4ºF (23.0ºC)**
Heating Load	**17.7 kBtu/h**
<Other>	
Indoor/Outdoor Equivalent Piping Length	**328 ft**

Capacity of indoor unit (kBtu/h)

<P•FY series>

Model Number for indoor unit	Model 04	Model 05	Model 06	Model 08	Model 12	Model 15	Model 18	Model 24	Model 27	Model 30	Model 36	Model 48	Model 54
Model Capacity	4.5	5.6	6.7	9.0	13.5	17.0	20.0	27.0	30.0	34.0	40.0	54.0	60.0

<M,S,P series>

Model name	Capacity class							
	06	09	12	15	18	24	30	36
SVZ	-	-	12.0	-	18.0	27.0	34.0	40.0
SLZ-KF	-	10.2	13.7	17.1	-	-	-	-
SEZ-KD	-	10.9	13.6	18.0	17.2	-	-	-
MFZ-KJ	-	10.9	13.0	18.0	21.0	-	-	-
MLZ-KP	-	10.9	13.0	-	21.0	-	-	-
MLZ-KY	7.2	-	-	-	-	-	-	-
MSZ-FH	8.7	10.9	13.6	18.0	20.3	-	-	-
MSZ-FS	8.7	10.9	13.6	18.0	20.3	-	-	-
MSZ-GL	7.2	10.9	14.4	18.0	21.6	27.6	-	-
MSZ-GS	7.2	10.9	14.4	18.0	21.6	27.6	-	-
MSZ-EF	-	10.9	13.0	18.0	21.0	-	-	-
PEAD	-	10.9	13.5	15.7	18.0	26.0	34.0	40.0
PLA	-	-	13.5	-	18.0	26.0	34.0	40.0
PAA-A	-	-	-	-	19.0	26.0	32.0	38.0

2. Heating Calculation

(1) Temporary Selection of Indoor Units

Room1

PEFY-P15 **17.0 kBtu/h (Rated)**

Room2

PEFY-P18 **20.0 kBtu/h (Rated)**

(2) Total Indoor Units Capacity

P15 + P18 = P33

(3) Selection of Outdoor Unit

The P36 outdoor unit is selected as total indoor units capacity is P33

MXZ-SM36NAM2 **41.0 kBtu/h**

(4) Total Indoor Units Capacity Correction Calculation

Room1

Indoor Design Dry Bulb Temperature Correction (69.8ºF) 1.00 (Refer to Figure 4)

Room2

Indoor Design Dry Bulb Temperature Correction (73.4ºF) 0.92 (Refer to Figure 4)

Total Indoor Units Capacity (CTi)

CTi = Σ (Indoor Unit Rating × Indoor Design Temperature Correction)

= 17.0 × 1.00 + 20.0 × 0.92

= 35.4 kBtu/h

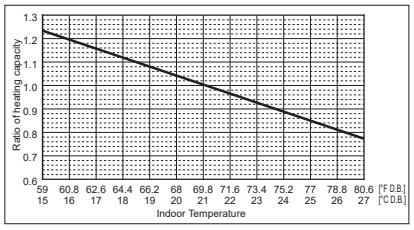

Figure 4 **Indoor unit temperature correction**
To be used to correct indoor unit only

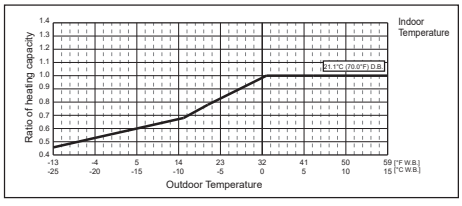

Figure 5 **Outdoor unit temperature correction**
To be used to correct outdoor unit only

(5) Outdoor Unit Correction Calculation

Outdoor Design Wet Bulb Temperature Correction (35.6ºF) 1.0 (Refer to Figure 5)

Piping Length Correction (328 ft) 0.94 (Refer to Figure 6)

Defrost Correction 0.89 (Refer to Table 1)

Total Outdoor Unit Capacity (CTo)

CTo = Outdoor Unit Rating × G(CTi)*1× Outdoor Design Temperature Correction × Piping Length Correction × Defrost Correction

= 41.0 × 1.0 × 0.94 × 0.89

= 34.3 kBtu/h

*1 G(CTi) is used only when greater than 100% indoor model size are connected in total, refer to STANDARD CAPACITY DIAGRAM.

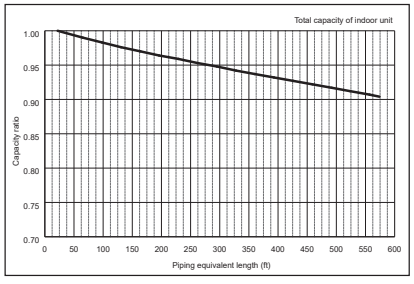

Figure 6 **Correction of refrigerant piping length**

Table 1 Table of correction factor at frost and defrost

Outdoor Intake temperature <W.B.°F (°C)>	43(6)	37(4)	36(2)	32(0)	28(−2)	25(−4)	21(−6)	18(−8)	14(−10)	5(−15)	−4(−20)	−13(−25)
Correction factor	1.00	0.98	0.89	0.88	0.89	0.90	0.95	0.95	0.95	0.95	0.95	0.95

(6) Determination of Maximum System Capacity

Comparison of Capacity between Total Indoor Units Capacity (CTi) and Total Outdoor Unit Capacity (CTo)

CTi = 35.4 > CTo = 34.3, thus, select CTo.

CTx = CTo = 34.3 kBtu/h

(7) Comparison with Essential Load

Against the essential load 34.0 kBtu/h, the maximum system capacity is 34.3 kBtu/h: Proper outdoor units have been selected.

(8) Calculation of Maximum Indoor Unit Capacity of Each Room

CTx = CTo, thus, calculate by the calculation below

Room1

Maximum Capacity × Room1 Capacity after the Temperature Correction/(Room1,2 Total Capacity after the Temperature Correction

= 34.3 × (17.0 × 1.00) / (17.0 × 1.00 + 20.0 × 0.92)

= 16.5 kBtu/h **OK: fulfills the load 16.3 kBtu/h**

Room2

Maximum Capacity × Room1 Capacity after the Temperature Correction/(Room1,2 Total Capacity after the Temperature Correction

= 34.3 × (20.0 × 0.92) / (17.0 × 1.00 + 20.0 × 0.92)

= 17.8 kBtu/h **OK: fulfills the load 17.7 kBtu/h**

Completed selecting units since the selected units fulfill the heating loads of Room 1, 2.

3. Power input of outdoor unit

Outdoor unit: MXZ-SM36NAM2
Indoor unit 1: PEFY-P15
Indoor unit 2: PEFY-P18

<Cooling>

(1) Rated power input of outdoor unit 2.40 kW

(2) Calculation of the average indoor temperature power input coefficient

Coefficient of the outdoor unit for indoor unit 1 (Outdoor temp. 98.6°F [37.0°C] D.B., Indoor temp. 68.0°F [20.0°C] W.B.)
1.04 (Refer to "4-2. CORRECTION BY TEMPERATURE".)

Coefficient of the outdoor unit for indoor unit 2 (Outdoor temp. 98.6°F [37.0°C] D.B., Indoor temp. 64.4°F [18.0°C] W.B.)
0.85 (Refer to "4-2. CORRECTION BY TEMPERATURE".)

Average indoor temp. power input coefficient $(C_{ave}) = \sum_{k=1}^{n} \{c_k \times (M_k / \sum_{k=1}^{n} M_k)\}$

n: Total number of the indoor units
k: Number of the indoor unit
c_k : Outdoor unit power input coefficient of k indoor unit room temp.
M_k: Number part of the k indoor unit model (e.g. P80 → 80)

Correction Coefficient of Indoor temperature = 1.04 × 15/(15 + 18) + 0.85 × 18/(15 + 18)
= 0.94

(3) Coefficient of the partial load f(CTi)

Total Indoor units capacity
15 + 18 = 33, thus, f(CTi) = 0.9 (Refer to the tables in "4-4.STANDARD CAPACITY DIAGRAM".)

(4) Outdoor power input (PIo)

Maximum System Capacity (CTx) = Total Outdoor unit Capacity (CTo), so use the following formula
PIo = Outdoor unit Cooling Rated Power Input × Correction Coefficient of Indoor temperature × f(CTi)
= 2.40 × 0.94 × 0.9
= 2.03 kW

<Heating>

(1) Rated power input of outdoor unit 3.01 kW

(2) Calculation of the average indoor temperature power input coefficient

Coefficient of the outdoor unit for indoor unit 1 (Outdoor temp. 26.6°F [−3°C] W.B., Indoor temp. 70°F [21.1°C] D.B.)
1.16 (Refer to "4-2. CORRECTION BY TEMPERATURE".)

Coefficient of the outdoor unit for indoor unit 2 (Outdoor temp. 26.6°F [−3°C] W.B., Indoor temp. 78.8°F [26°C] D.B.)
1.09 (Refer to "4-2. CORRECTION BY TEMPERATURE".)

Average indoor temp. power input coefficient $(C_{ave}) = \sum_{k=1}^{n} \{c_k \times (M_k / \sum_{k=1}^{n} M_k)\}$

n: Total number of the indoor units
k: Number of the indoor unit
c_k : Outdoor unit power input coefficient of k indoor unit room temp.
M_k : Number part of the k indoor unit model (e.g. P80 → 80)

Correction Coefficient of Indoor temperature = 1.16 × 15/(15 + 18) + 1.09 × 18/(15 + 18)
= 1.12

(3) Coefficient of the partial load f(CTi)

Total indoor units capacity
15 + 18 = 33, thus, f(CTi) = 0.9 (Refer to the tables in "4-4. STANDARD CAPACITY DIAGRAM".)

(4) Outdoor power input (PIo)

Maximum System Capacity (CTx) = Total Indoor unit Capacity (CTi), so use the following formula
PIo = Outdoor unit Heating Rated Power Input × Correction Coefficient of Indoor temperature × f(CTi)
= 3.01 × 1.12 × 0.9
= 3.03 kW

4-2. CORRECTION BY TEMPERATURE

CITY MULTI could have varied capacity at different designing temperature. Using the nominal cooling/heating capacity value and the ratio below, the capacity can be observed at various temperature.

<Cooling>

Figure 7 Indoor unit temperature correction
To be used to correct indoor unit capacity only

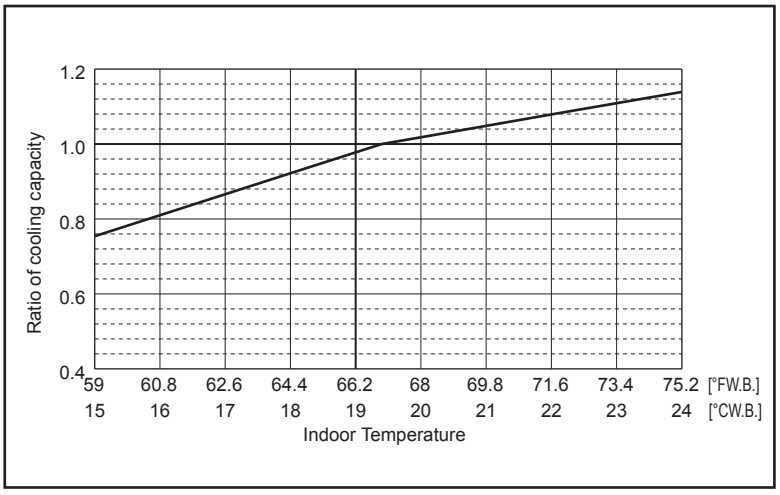

Figure 8 Outdoor unit temperature correction
To be used to correct outdoor unit capacity only

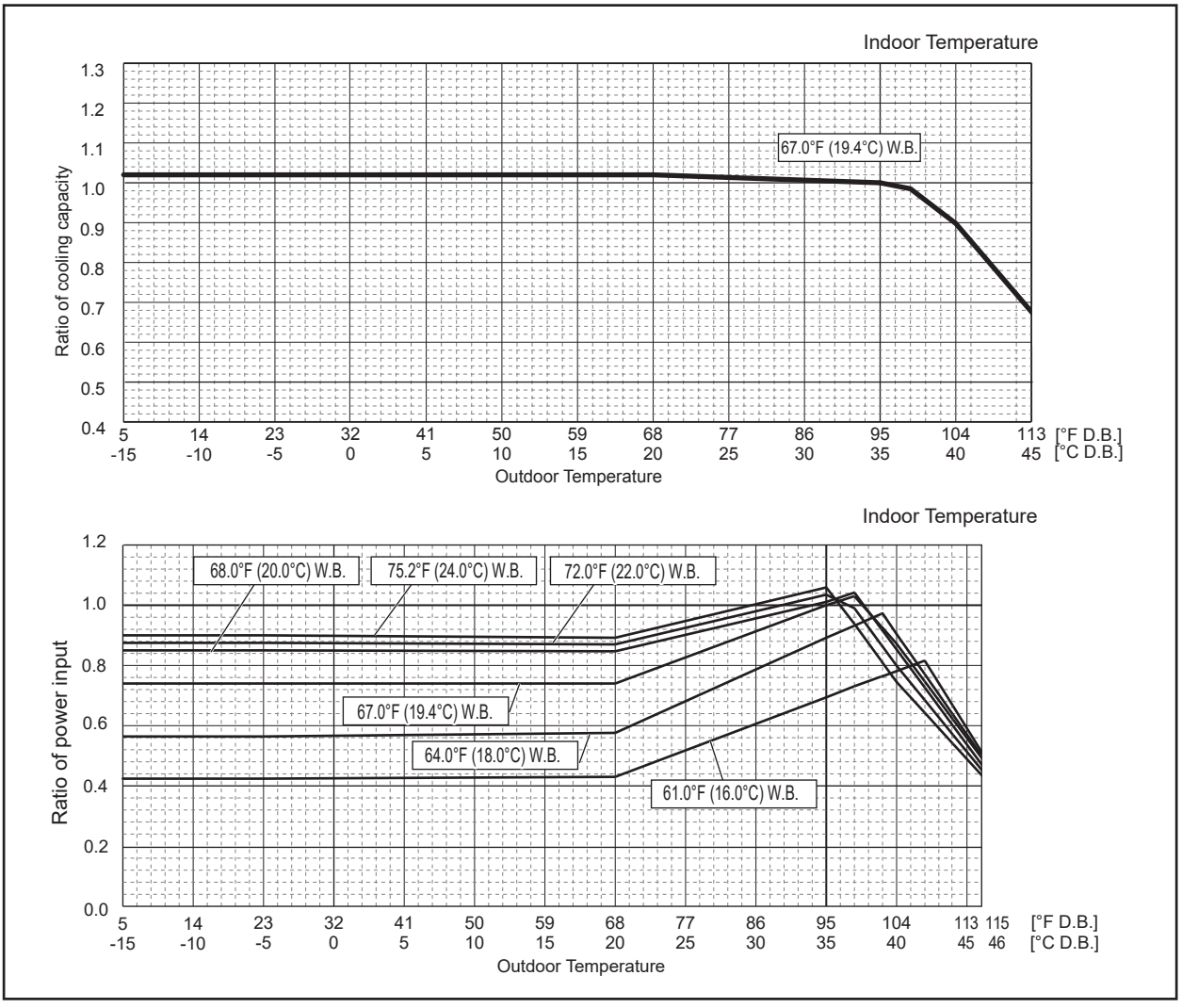

<Heating>

MXZ-SM36NAM2-U1 **MXZ-SM48NAM2-U1** **MXZ-SM60NAM2-U1**

Figure 9 Indoor unit temperature correction
To be used to correct indoor unit capacity only

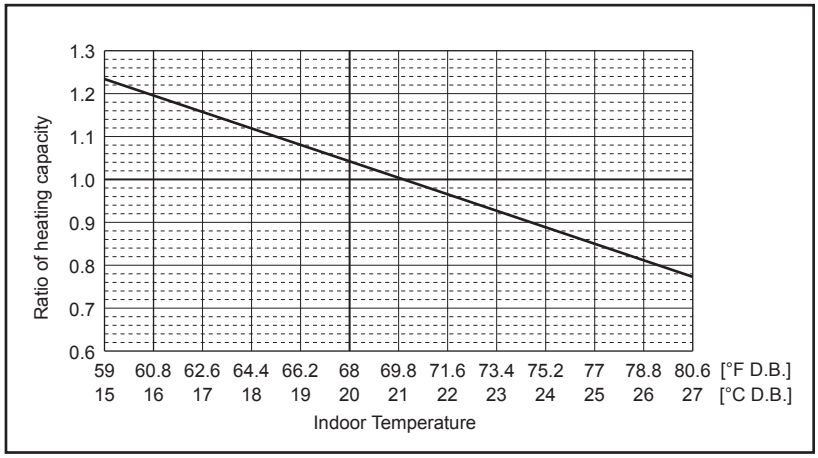

Figure 10 Outdoor unit temperature correction
To be used to correct outdoor unit capacity only

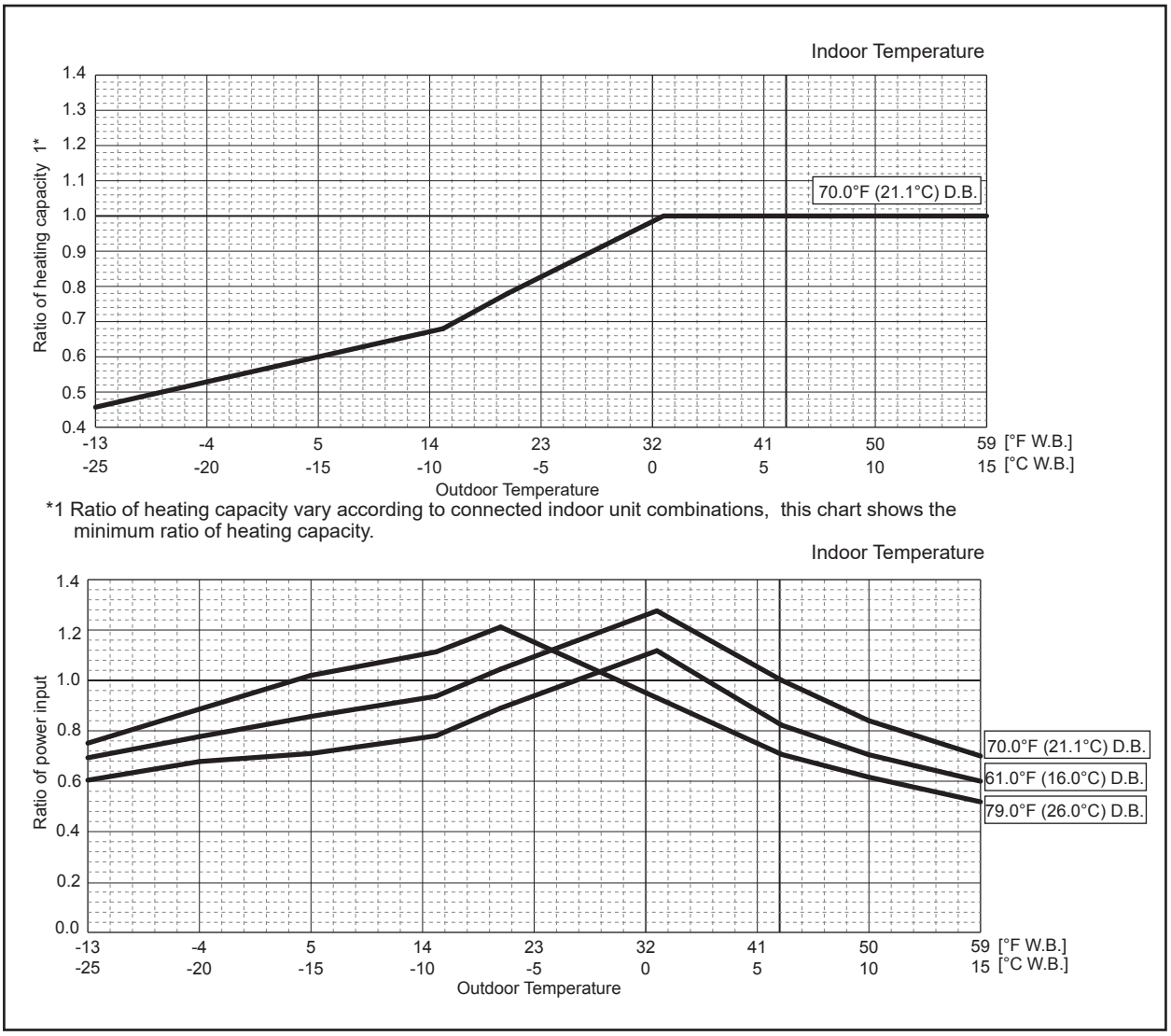

<Heating>

MXZ-SM36NAMHZ2-U1 MXZ-SM42NAMHZ2-U1 MXZ-SM48NAMHZ2-U1

Figure 11 Indoor unit temperature correction
To be used to correct indoor unit capacity only

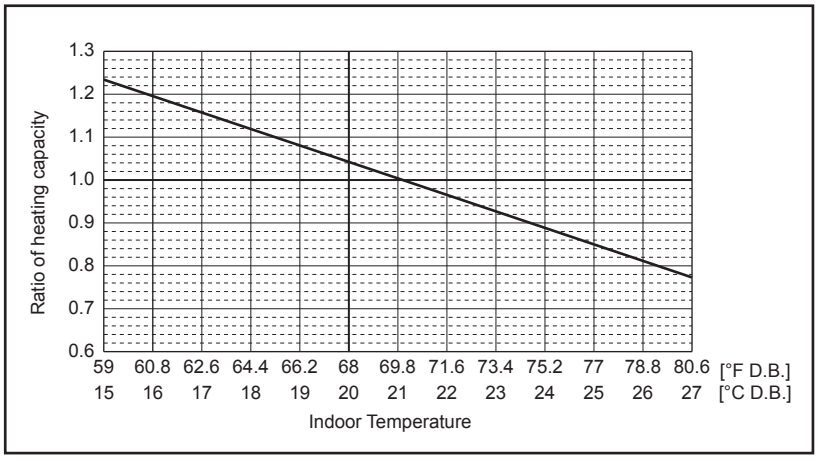

Figure 12 Outdoor unit temperature correction
To be used to correct outdoor unit capacity only

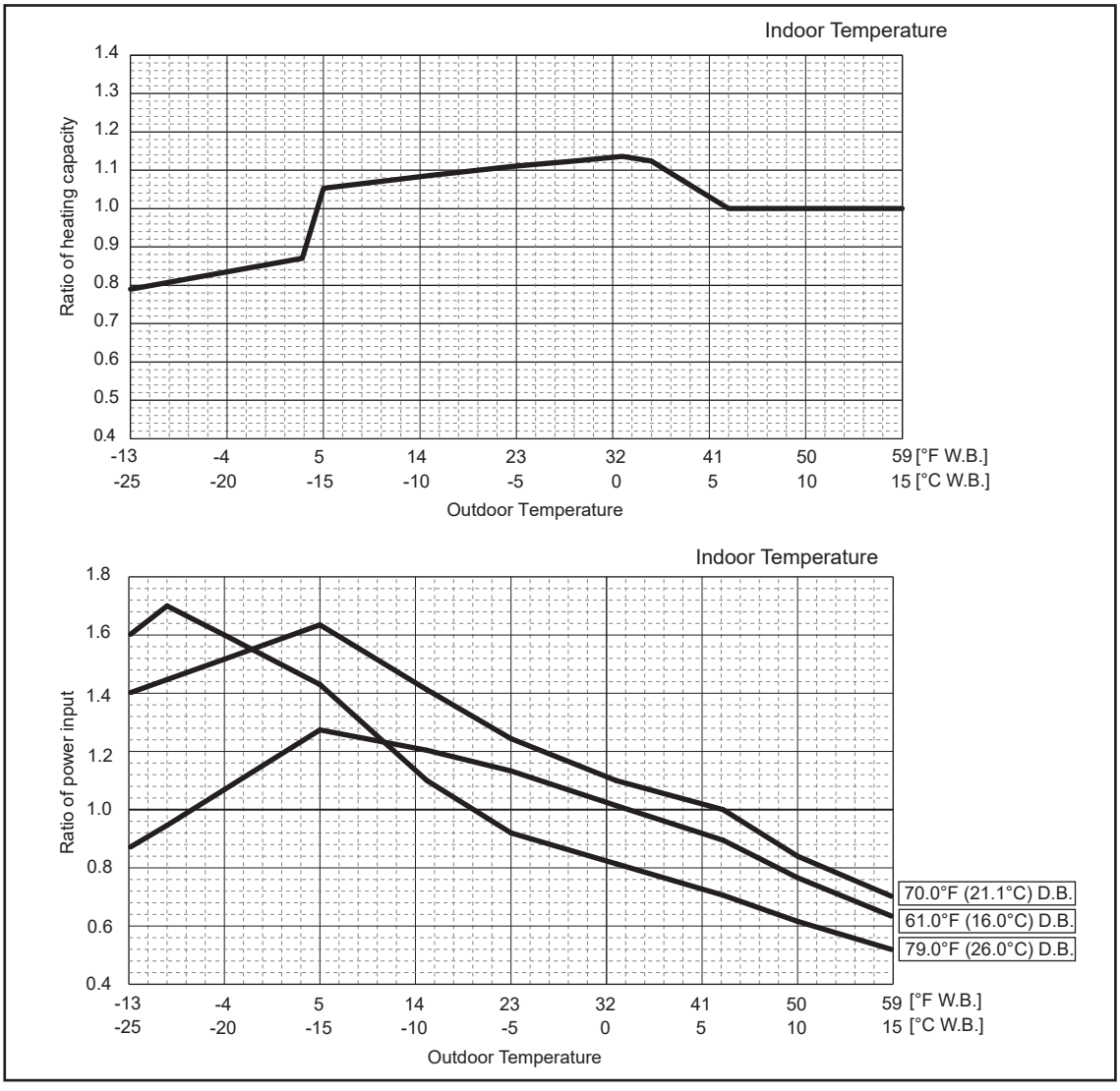

4-3. STANDARD OPERATION DATA (REFERENCE DATA)

Operation				MXZ-SM36NAM2-U1		MXZ-SM48NAM2-U1		MXZ-SM60NAM2-U1	
Operating conditions	Ambient temperature	Indoor	DB/WB	80°F/67°F [26.7°C / 19.4°C]	70°F/60°F [21.1°C/15.6°C]	80°F/67°F [26.7°C/19.4°C]	70°F/60°F [21.1°C/15.6°C]	80°F/67°F [26.7°C/19.4°C]	70°F/60°F [21.1°C/15.6°C]
		Outdoor		95°F/75°F [35.0°C/23.9°C]	47°F / 43°F [8.3°C/6.1°C]	95°F/ 75°F [35.0°C / 23.9°C]	47°F/43°F [8.3°C/6.1°C]	95°F/75°F [35.0°C/23.9°C]	47°F/43°F [8.3°C/6.1°C]
	Indoor unit	No. of connected units	Unit	3		4		4	
		No. of units in operation		3		4		4	
		Model	—	12 × 3		12 × 4		15 × 4	
	Piping	Main pipe	Ft (m)	9.84 (3)		9.84 (3)		9.84 (3)	
		Branch pipe		14.76 (4.5)		14.76 (4.5)		14.76 (4.5)	
		Total pipe length		54.13 (16.5)		68.90 (21)		68.90 (21)	
	Fan speed		—	Hi		Hi		Hi	
	Amount of refrigerant		LBS. OZ. (kg)	17 LBS. (7.7)		17 LBS. 3 OZ. (7.8)		19 LBS. 6 OZ. (8.8)	
Outdoor unit	Electric current		A	10.2	13.3	15.6	17.1	19.3	20.4
	Voltage		V	230		230		230	
	Compressor frequency		Hz	47	66	64	81	53	64
LEV opening	Indoor unit		Pulse	268	438	247	313	386	498
Pressure	High pressure/Low pressure		PSIG [MPaG]	370/159 [2.55/1.10]	306/104 [2.11/0.72]	415/159 [2.86/1.09]	315/97 [2.17/0.67]	397/144 [2.75/1.02]	330/98 [2.28/0.68]
Temp. of each section	Outdoor unit	Discharge	°F[°C]	139.1 [59.5]	118.9 [48.3]	149.5 [65.3]	135.9 [57.7]	143.2 [61.8]	121.1 [49.5]
		Heat exchanger outlet		101.3 [38.5]	34.3 [1.3]	102.2 [39.0]	32.2 [0.1]	102.9 [39.4]	32.9 [0.5]
		Accumulator inlet		56.7 [13.7]	33.4 [0.8]	57.6 [14.2]	31.3 [−0.4]	52.3 [11.3]	32.3 [0.1]
		Compressor inlet		62.8 [17.1]	33.6 [0.9]	60.4 [15.8]	32.7 [0.4]	53.8 [12.1]	31.6 [-0.2]
	Indoor unit	Lev inlet		73.8 [23.2]	81.4 [27.4]	68.4 [20.2]	75.2 [24.0]	85.3 [29.6]	84.6 [29.2]
		Heat exchanger inlet		68.2 [20.1]	71.4 [21.9]	67.9 [19.9]	127.8 [53.2]	84.2 [29.0]	113.9 [45.5]

Operation				MXZ-SM36NAMHZ2-U1		MXZ-SM42NAMHZ2U1		MXZ-SM48NAMHZ2-U1	
Operating conditions	Ambient temperature	Indoor	DB/WB	80°F/67°F [26.7°C/19.4°C]	70°F/60°F [21.1°C/15.6°C]	80°F/67°F [26.7°C/19.4°C]	70°F/60°F [21.1°C/15.6°C]	80°F/67°F [26.7°C/19.4°C]	70°F/60°F [21.1°C/15.6°C]
		Outdoor		95°F/75°F [35.0°C/23.9°C]	47°F / 43°F [8.3°C/6.1°C]	95°F/ 75°F [35.0°C/23.9°C]	47°F/43°F [8.3°C/6.1°C]	95°F/ 75°F [35.0°C/23.9°C]	47°F/43°F [8.3°C/6.1°C]
	Indoor unit	No. of connected units	Unit	3		3		4	
		No. of units in operation		3		3		4	
		Model	—	12 × 3		12 × 2 + 18 × 1		12 × 4	
	Piping	Main pipe	Ft (m)	9.84 (3)		9.84 (3)		9.84 (3)	
		Branch pipe		14.76 (4.5)		14.76 (4.5)		14.76 (4.5)	
		Total pipe length		54.13 (16.5)		68.90 (21)		68.90 (21)	
	Fan speed		—	Hi		Hi		Hi	
	Amount of refrigerant		LBS. OZ. (kg)	17 LBS. (7.7)		17 LBS. (7.7)		17 LBS. 3 OZ. (7.8)	
Outdoor unit	Electric current		A	10.2	13.3	13.4	14.8	15.6	17.1
	Voltage		V	230		230		230	
	Compressor frequency		Hz	47	66	58	70	64	81
LEV opening	Indoor unit		Pulse	268	438	299/414	348/520	247	313
Pressure	High pressure/Low pressure		PSIG [MPaG]	370/159 [2.55/1.10]	306/104 [2.11/0.72]	419/155 [2.89/1.17]	347/115 [2.39/0.79]	415/159 [2.86/1.09]	316/96 [2.18/0.66]
Temp. of each section	Outdoor unit	Discharge	°F[°C]	139.1 [59.5]	118.9 [48.3]	142.9 [61.6]	131.7 [55.4]	149.5 [65.3]	128.1 [53.4]
		Heat exchanger outlet		101.3 [38.5]	34.3 [1.3]	100.9 [38.3]	32.9 [0.5]	102.2 [39.0]	32.4 [0.2]
		Accumulator inlet		56.7 [13.7]	33.4 [0.8]	55.4 [13.0]	31.8 [−0.1]	57.6 [14.2]	32.0 [0.0]
		Compressor inlet		62.8 [17.1]	33.6 [0.9]	54.5 [12.5]	31.1 [−0.5]	60.4 [15.8]	32.7 [0.4]
	Indoor unit	Lev inlet		73.8 [23.2]	81.4 [27.4]	73.8 [23.2]	79.0 [26.1]	68.4 [20.2]	68.7 [20.4]
		Heat exchanger inlet		68.2 [20.1]	71.4 [21.9]	56.5 [13.6]	123.8 [51.0]	67.9 [19.9]	122.0 [50.0]

4-4. STANDARD CAPACITY DIAGRAM

Before calculating the sum of total capacity of indoor units, please convert the value into the kBtu/h model capacity following the formula on "4-1. Method for obtaining system cooling and heating capacity".

4-4-1. MXZ-SM36NAM2-U1 MXZ-SM36NAMHZ2-U1 <Cooling>

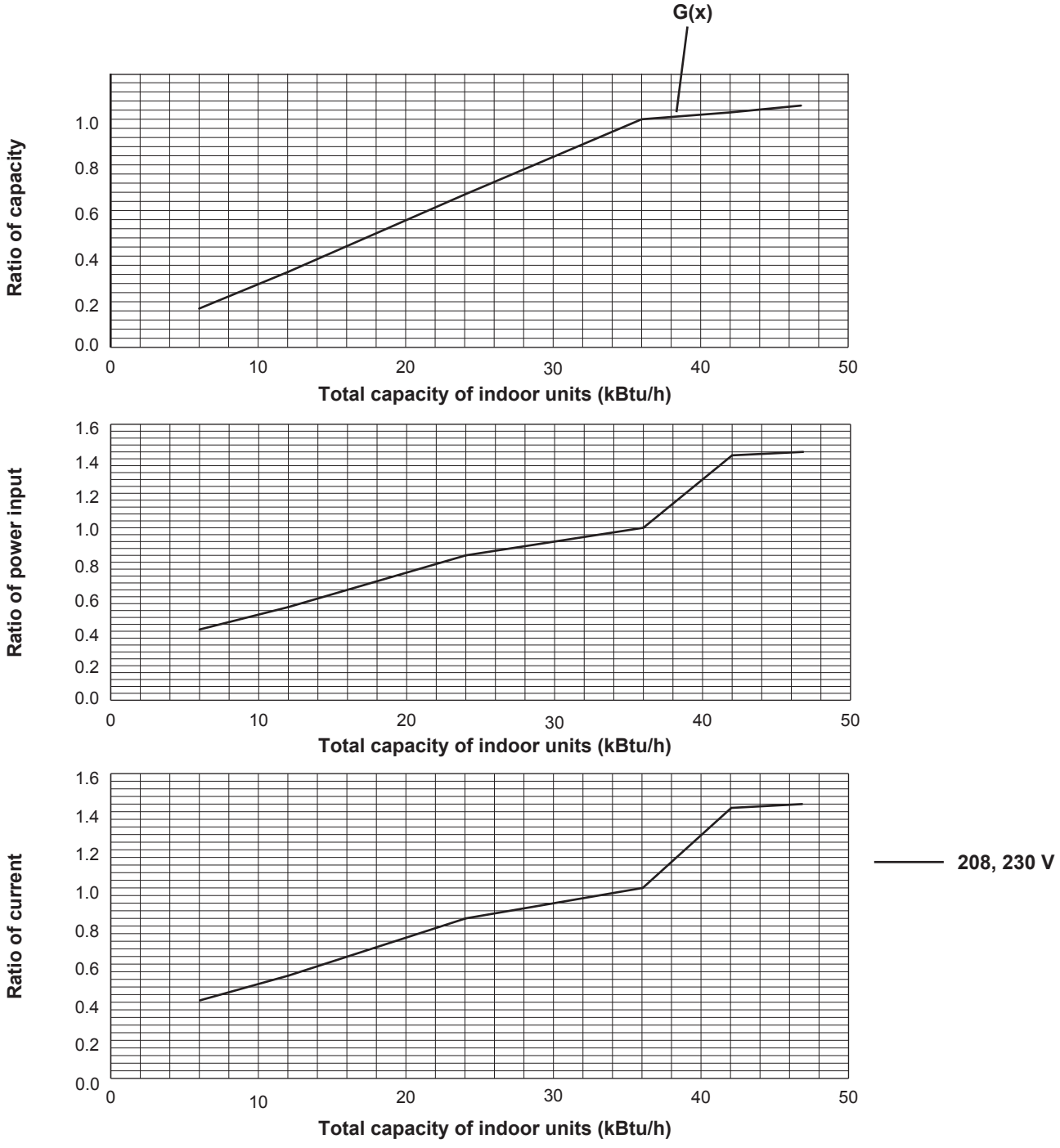

4-4-2. MXZ-SM36NAM2-U1 MXZ-SM36NAMHZ2-U1 <Heating>

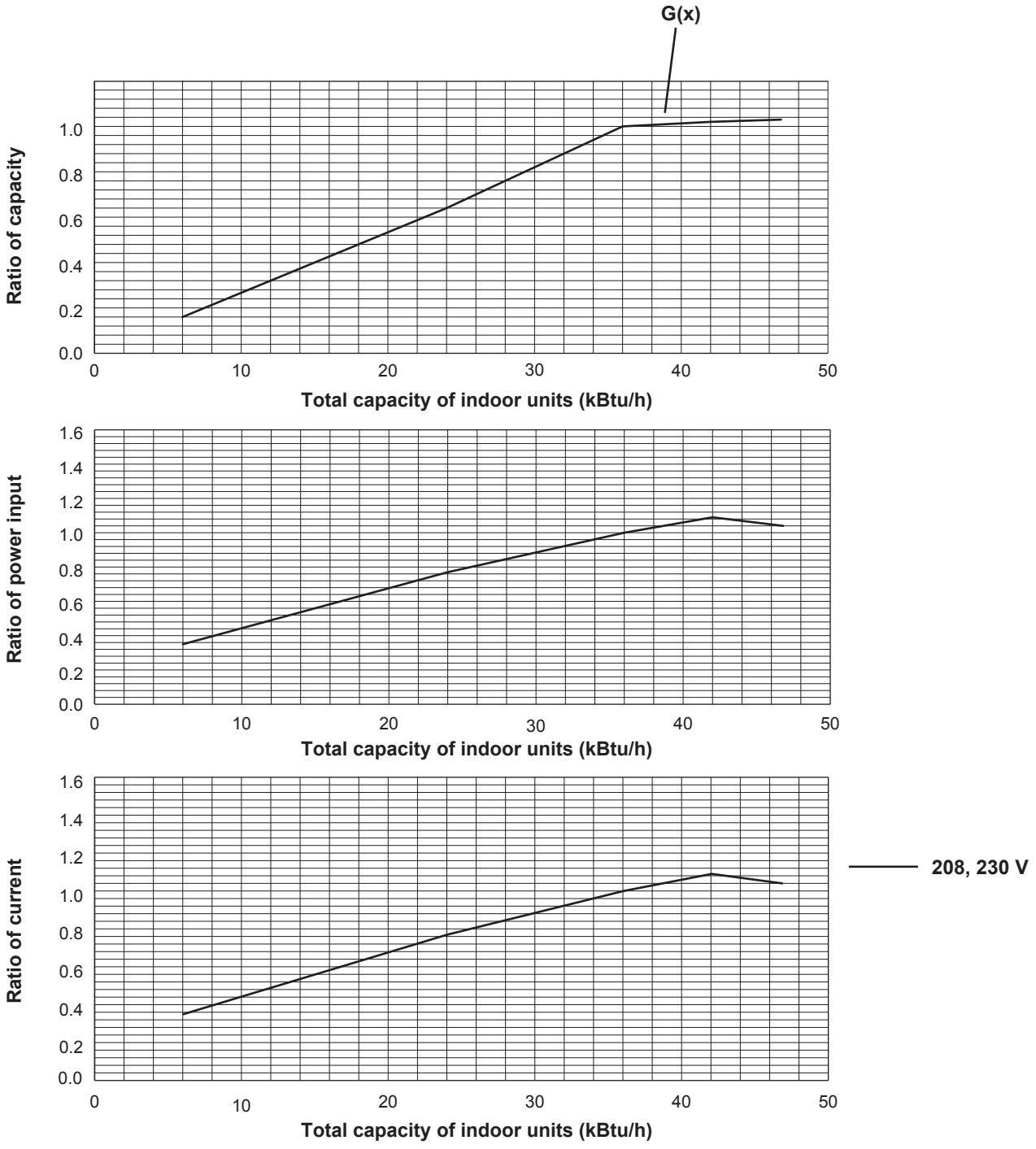

4-4-3. MXZ-SM42NAMHZ2-U1

<Cooling>

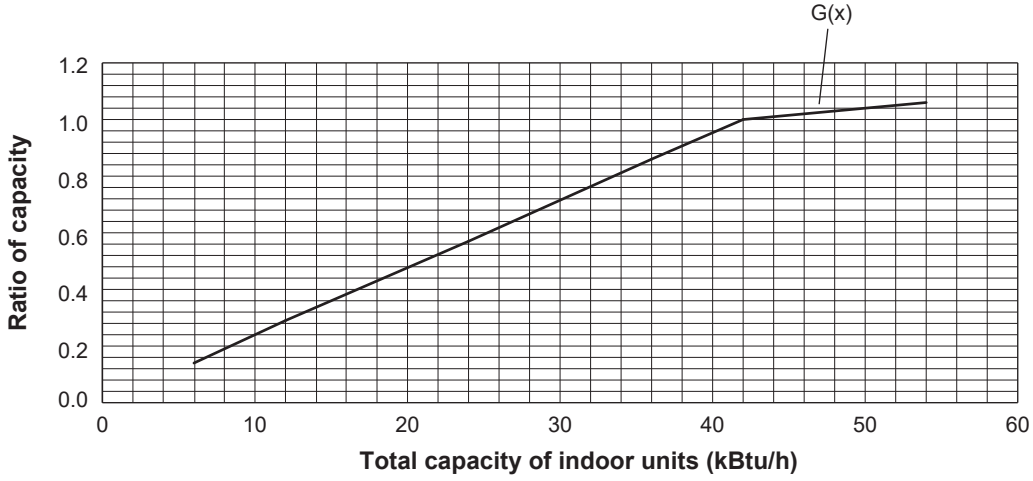

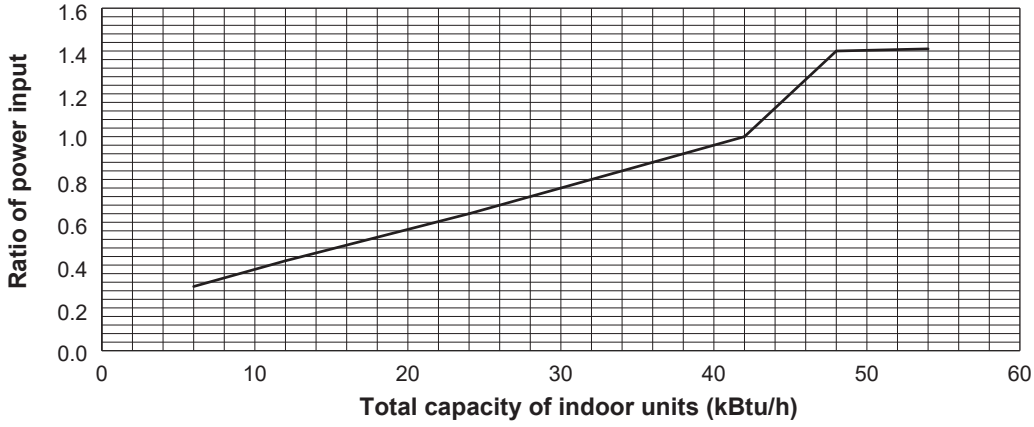

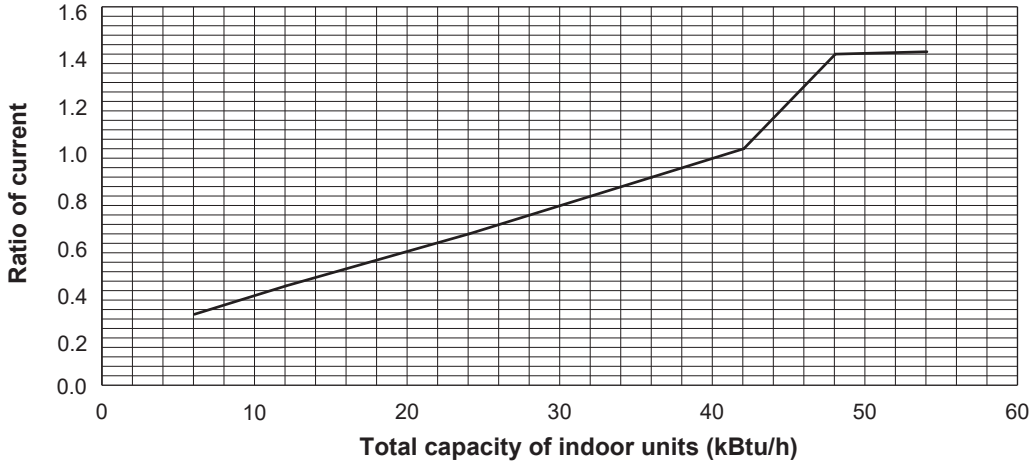

208, 230 V

4-4-4. MXZ-SM42NAMHZ2-U1

<Heating>

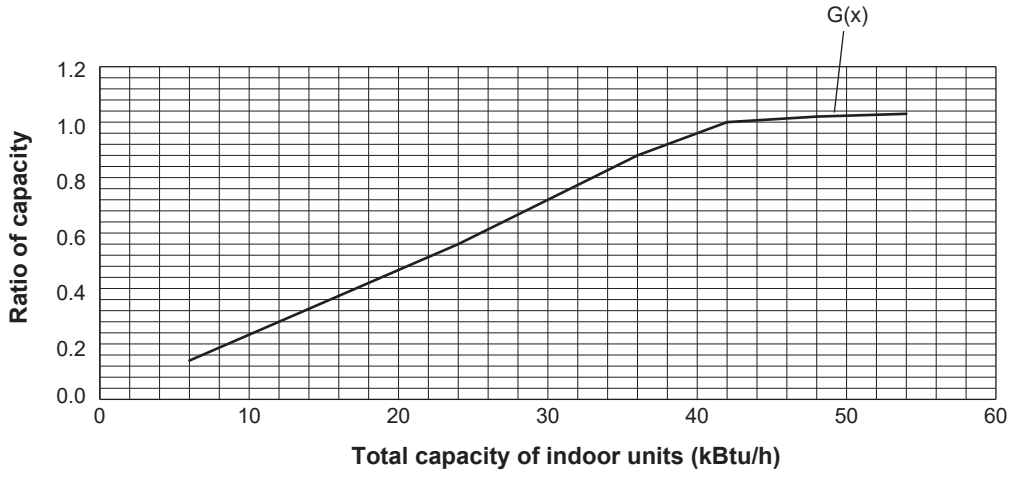

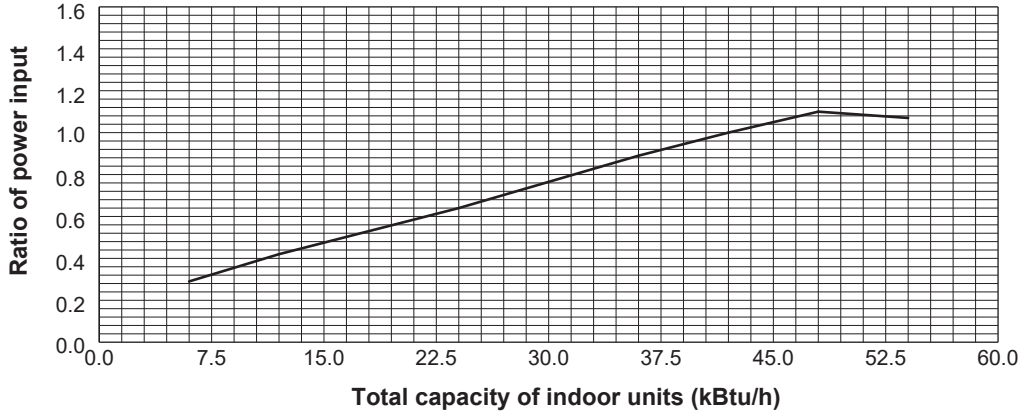

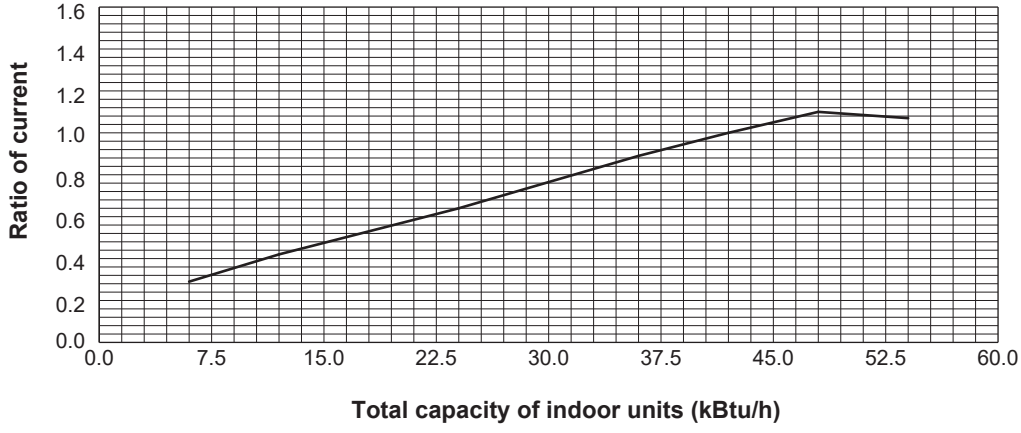

208, 230 V

4-4-5. MXZ-SM48NAM2-U1 MXZ-SM48NAMHZ2-U1 <Cooling>

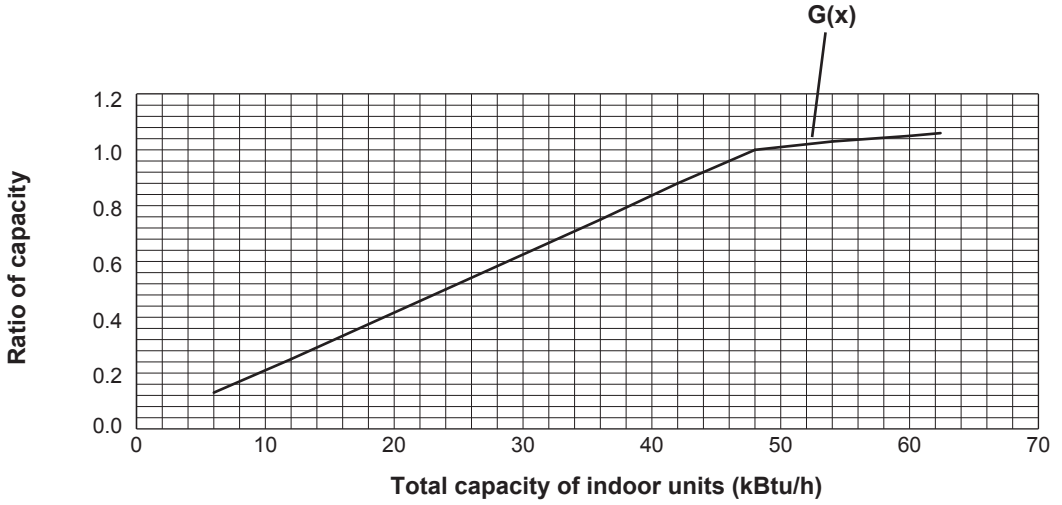

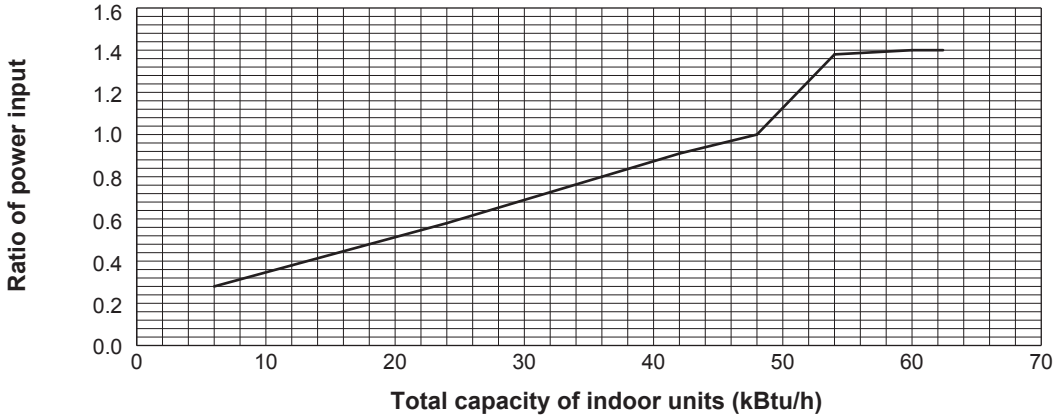

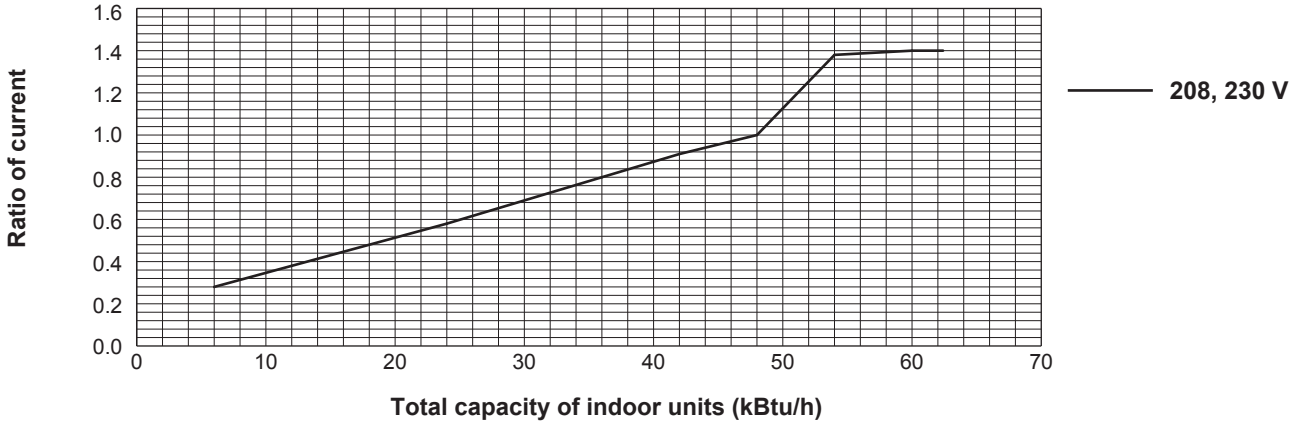

4-4-6. MXZ-SM48NAM2-U1 MXZ-SM48NAMHZ2-U1 <Heating>

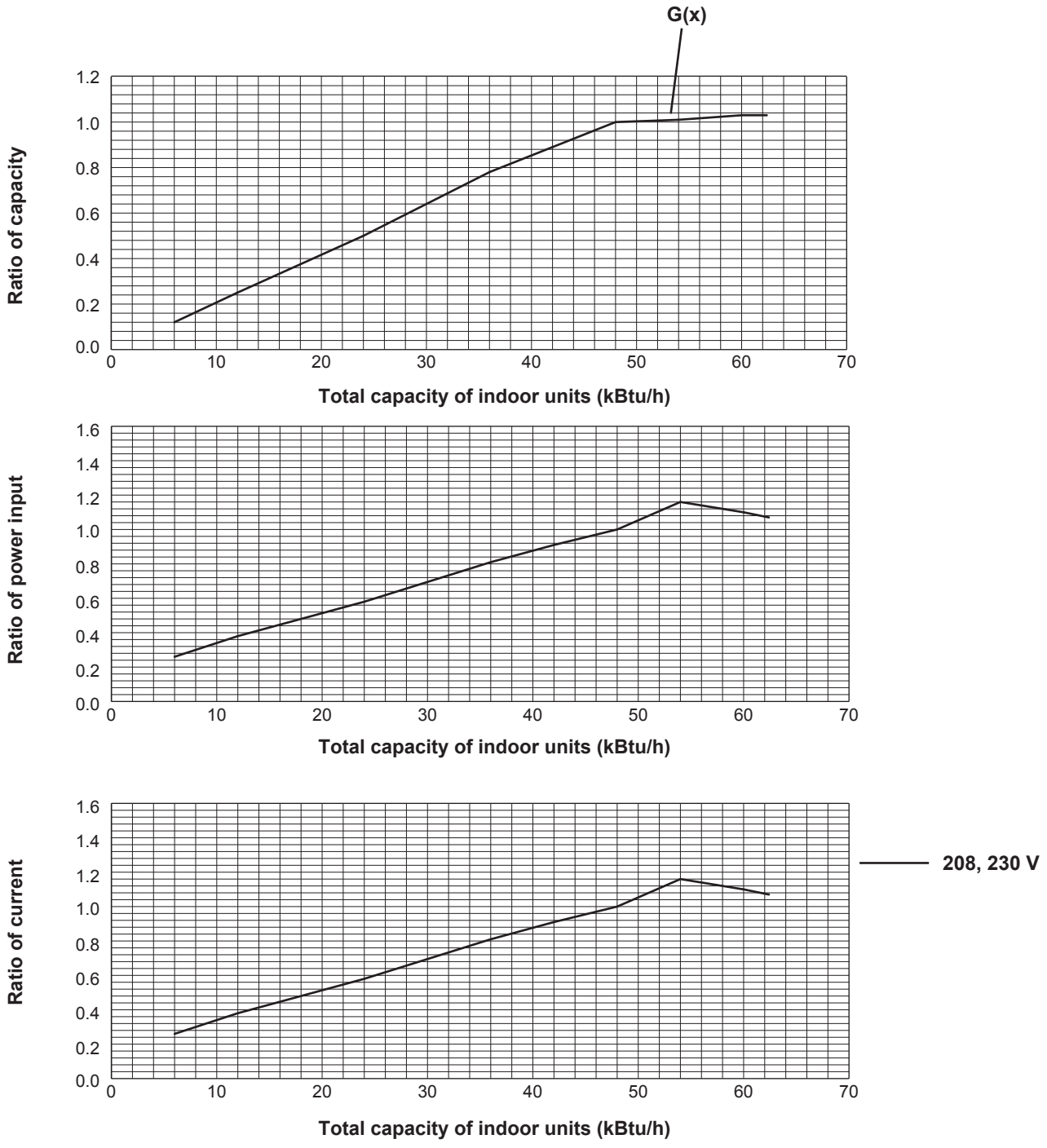

4-4-7. MXZ-SM60NAM2-U1 <Cooling>

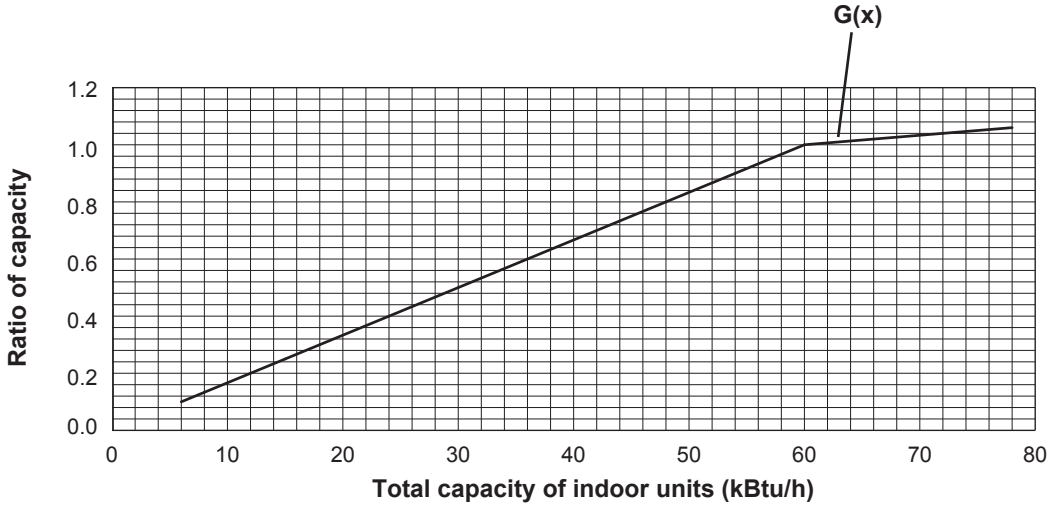

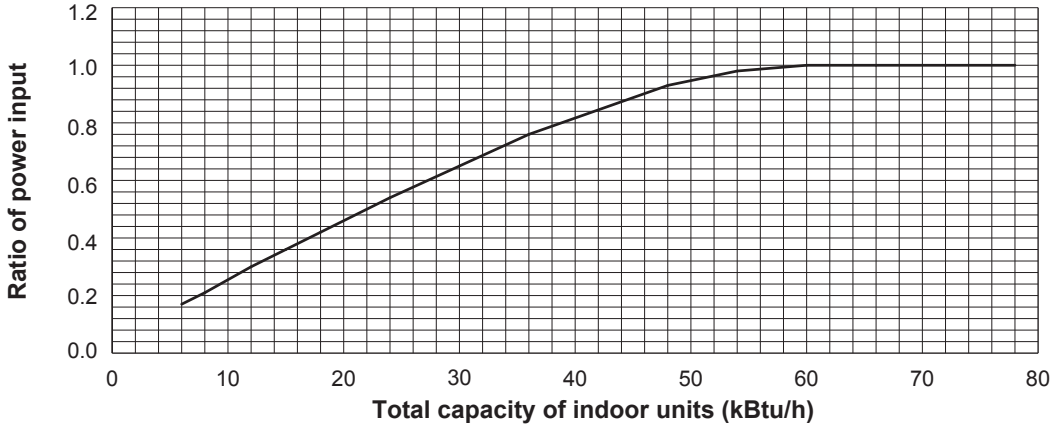

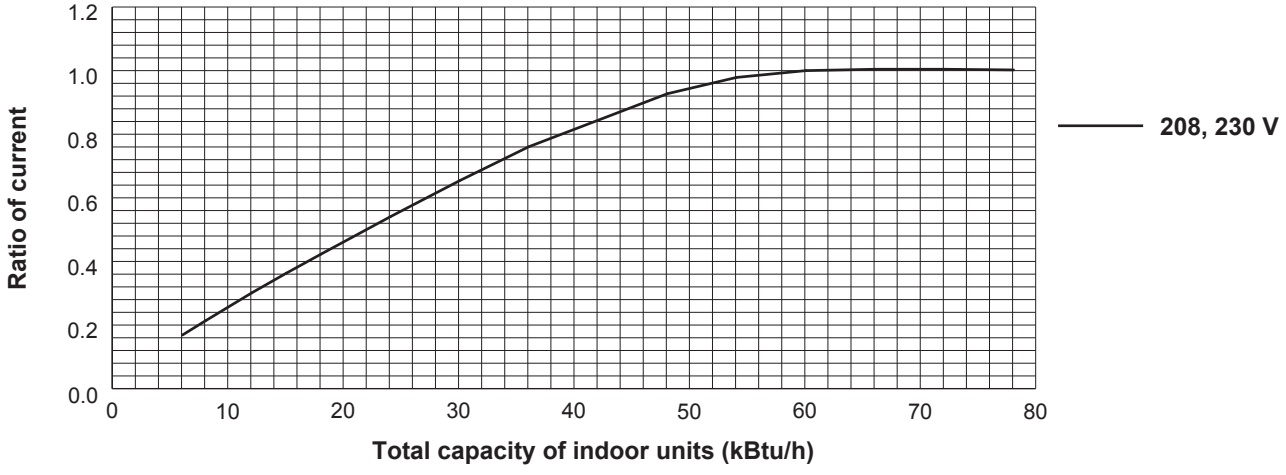

4-4-8. MXZ-SM60NAM2-U1 **<Heating>**

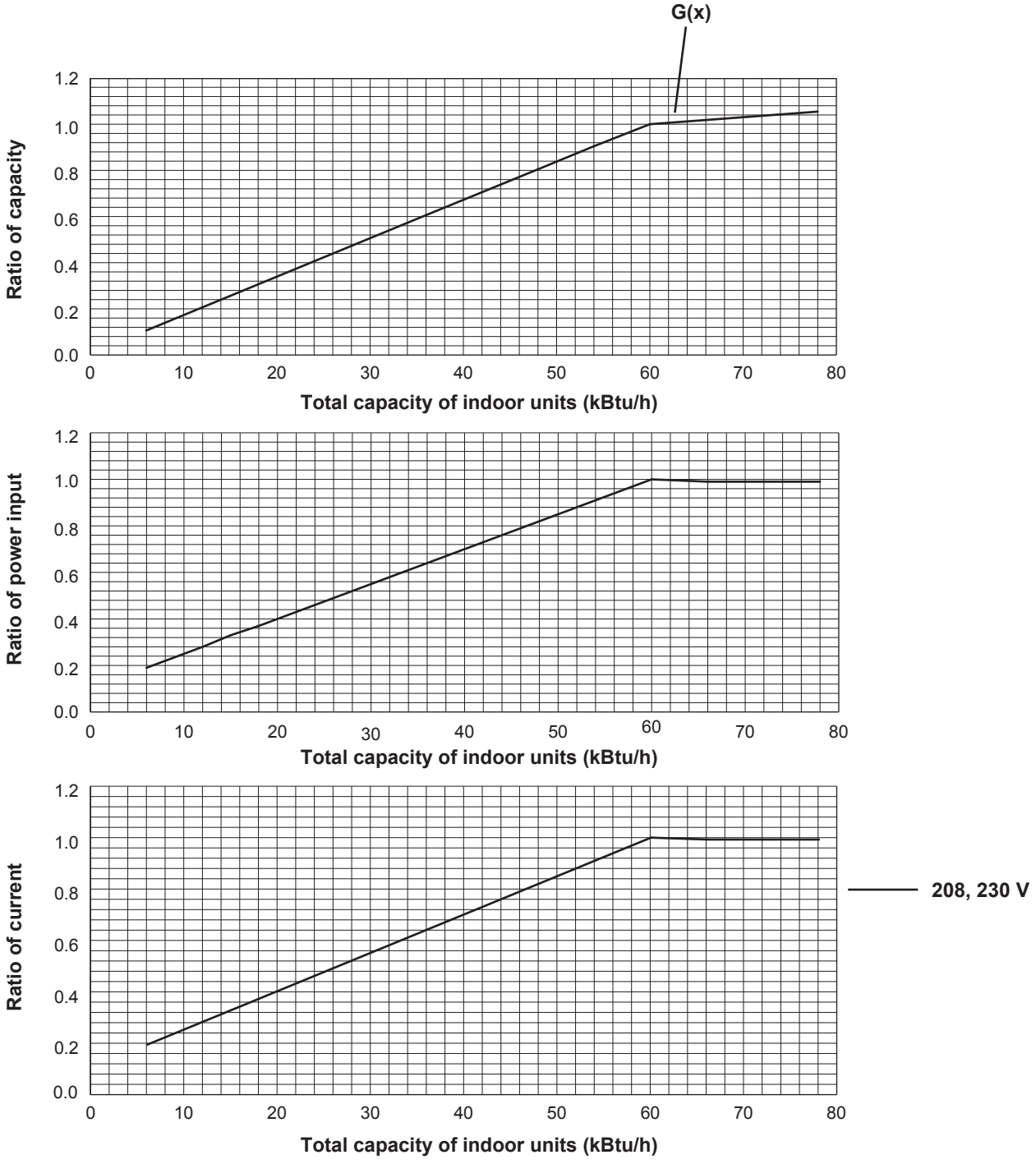

4-5. CORRECTING CAPACITY FOR CHANGES IN THE LENGTH OF REFRIGERANT PIPING

(1) During cooling, obtain the ratio (and the equivalent piping length) of the outdoor units rated capacity and the total in-use indoor capacity, and find the capacity ratio corresponding to the standard piping length from Figure 13 to 17. Then multiply by the cooling capacity from Figure 7 and 8 in "4-2. CORRECTION BY TEMPERATURE" to obtain the actual capacity.

(2) During heating, find the equivalent piping length, and find the capacity ratio corresponding to standard piping length from Figure 18. Then multiply by the heating capacity from Figure 9 and 10 in "4-2. CORRECTION BY TEMPERATURE" to obtain the actual capacity.

(1) Capacity Correction Curve

Figure 13 MXZ-SM36NAM2-U1 MXZ-SM36NAMHZ2-U1 <Cooling>

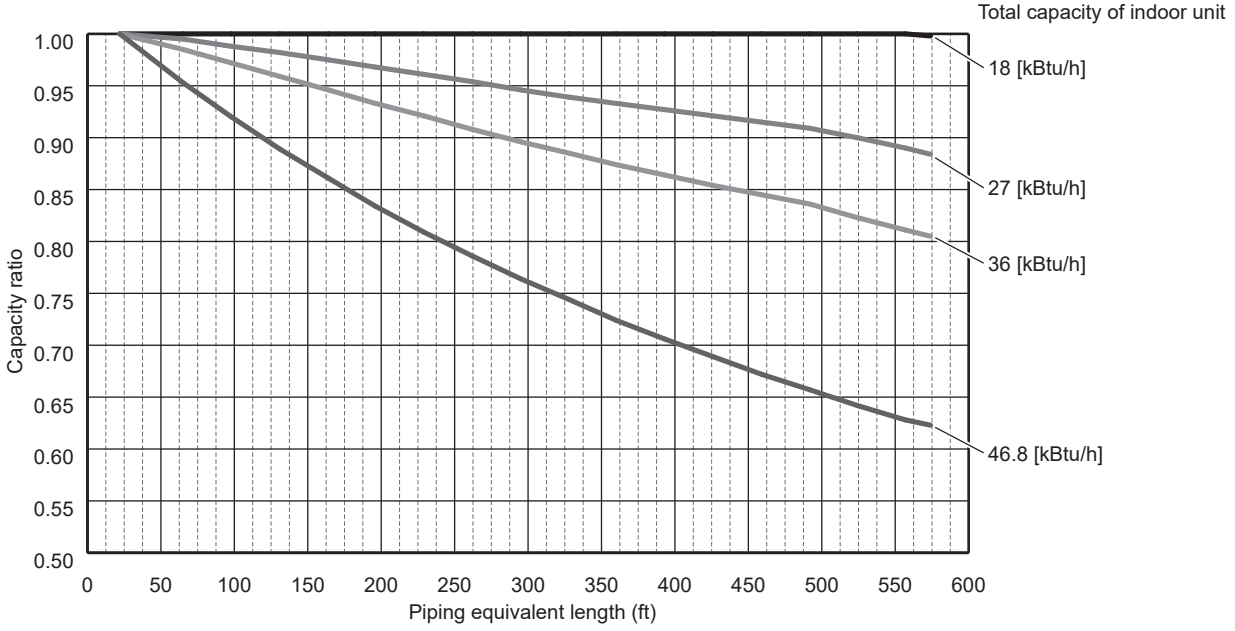

Figure 14 MXZ-SM42NAMHZ2-U1 <Cooling>

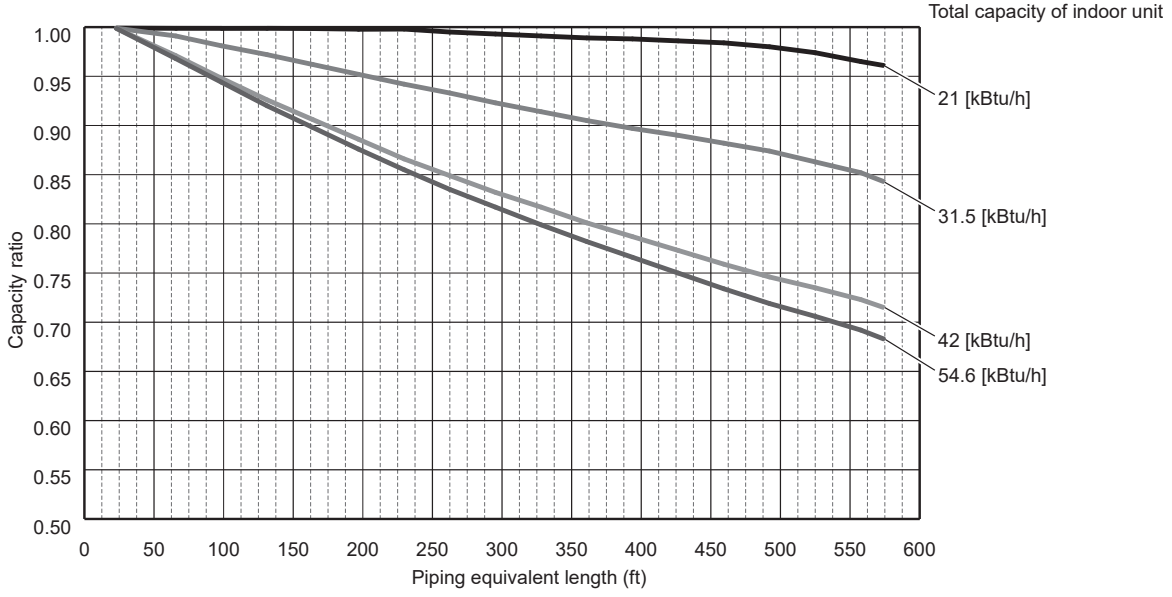

Figure 15 MXZ-SM48NAM2-U1 MXZ-SM48NAMHZ2-U1 <Cooling>

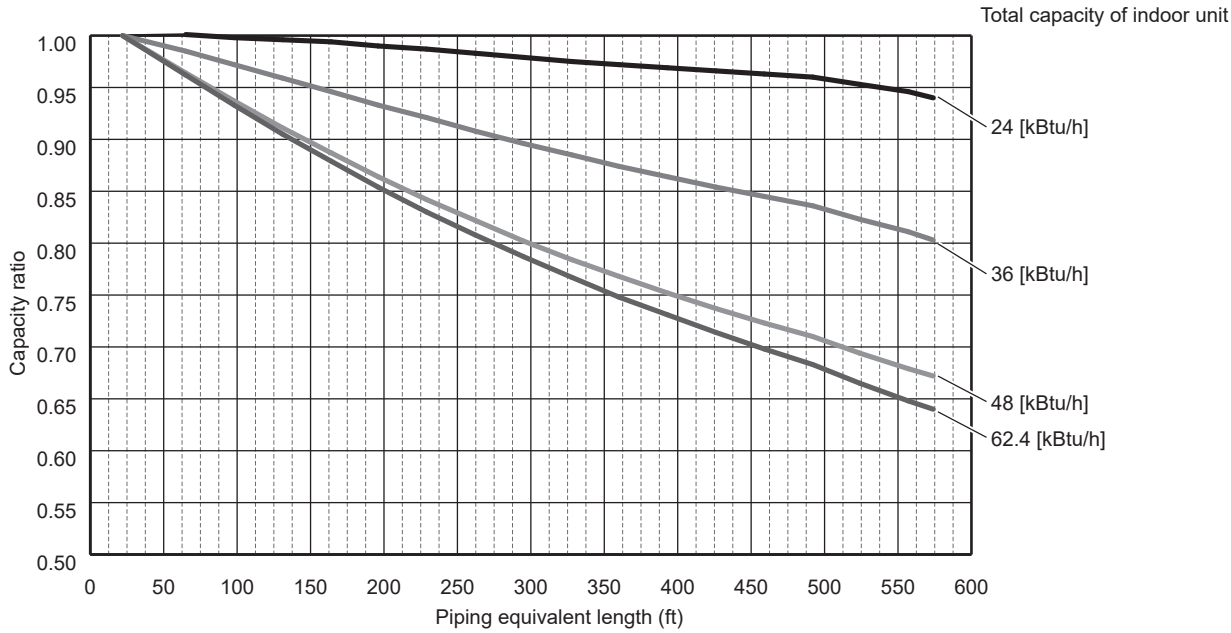

Figure 16 MXZ-SM60NAM2-U1 <Cooling>

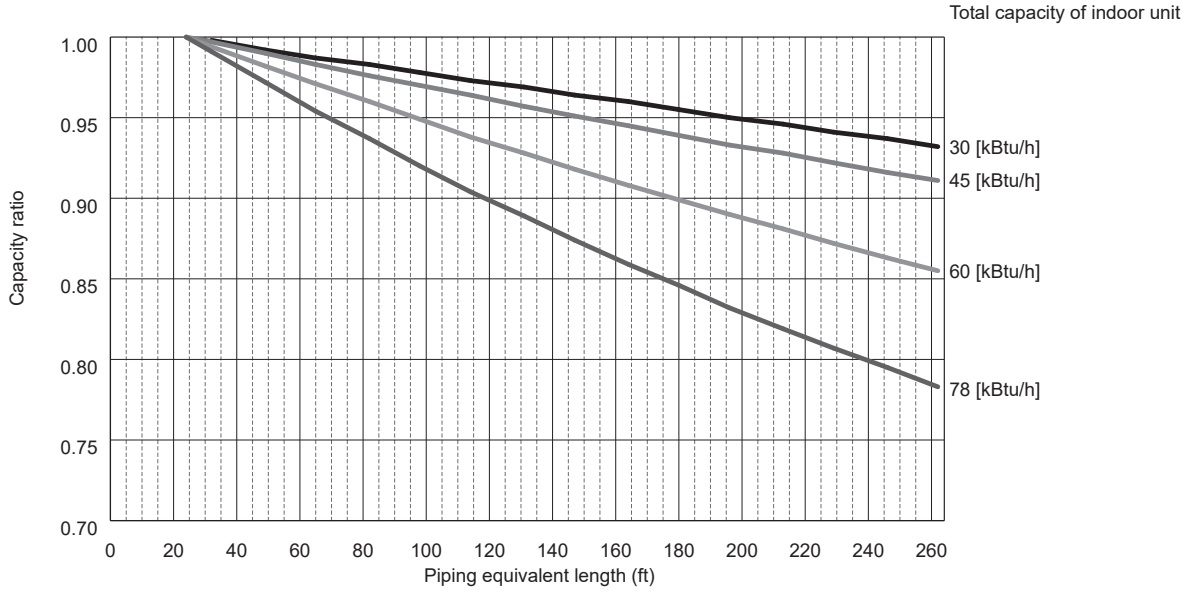

Figure 17 MXZ-SM36NAM2-U1 MXZ-SM36NAMHZ2-U1
MXZ-SM42NAMHZ2-U1
MXZ-SM48NAM2-U1 MXZ-SM48NAMHZ2-U1 <Heating>

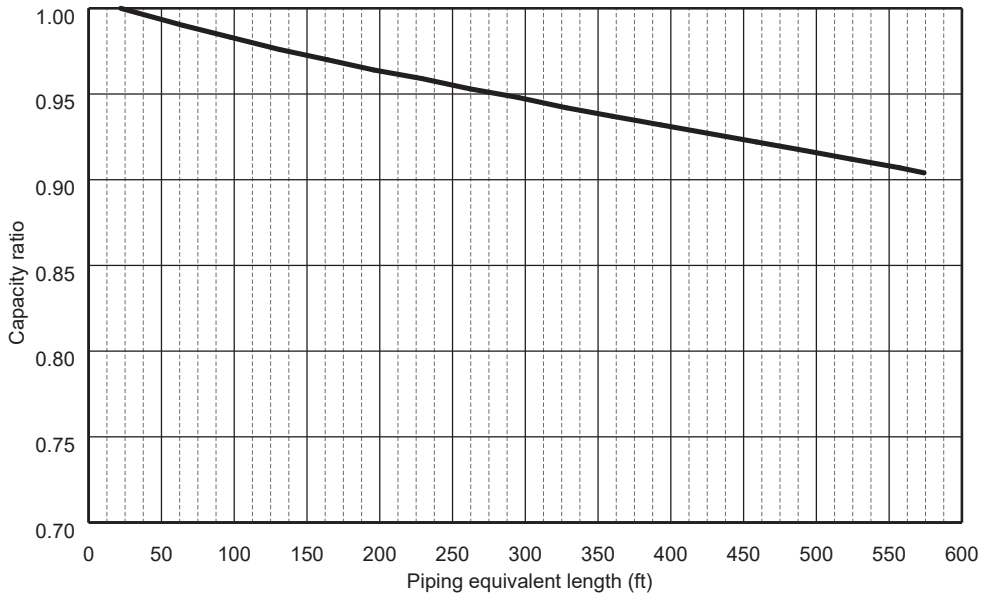

Figure 18 MXZ-SM60NAM2-U1 <Heating>

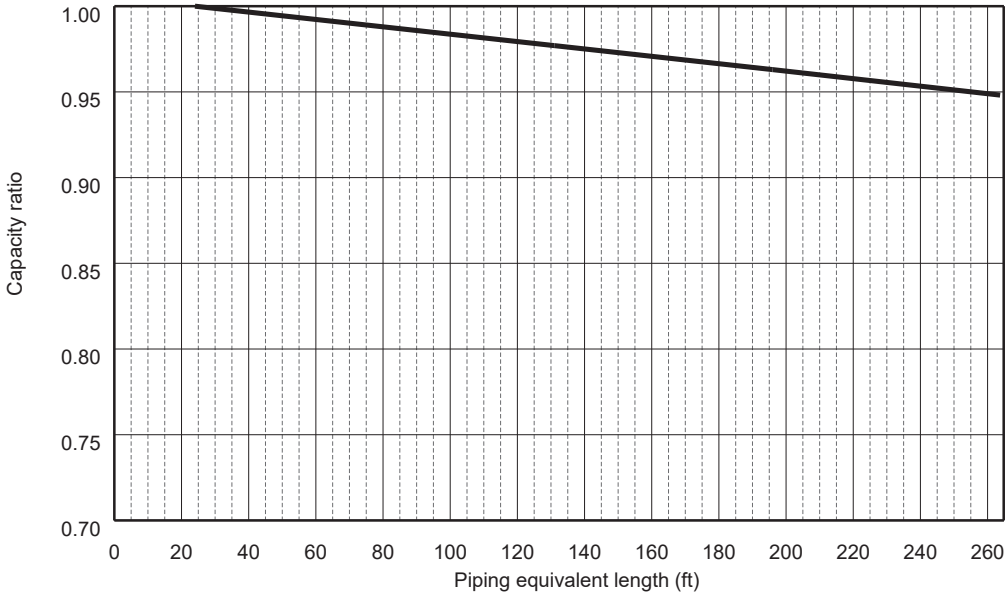

(2) Method for Obtaining the Equivalent Piping Length

Equivalent length = (length of piping to farthest indoor unit) + (0.99 × number of bends in the piping) (ft)

4-5-1. Correction of Heating Capacity for Frost and Defrosting

If heating capacity has been reduced due to frost formation or defrosting, multiply the capacity by the appropriate correction factor from the following table to obtain the actual heating capacity.

Correction factor diagram

Outdoor Intake temperature <W.B.°F (°C)>	43(6)	37(4)	36(2)	32(0)	28(−2)	25(−4)	21(−6)	18(−8)	14(−10)	5(−15)	−4(−20)	−13(−25)
Correction factor	1.00	0.98	0.89	0.88	0.89	0.90	0.95	0.95	0.95	0.95	0.95	0.95

4-6. NOISE CRITERION CURVES

MXZ-SM36NAM2-U1
MXZ-SM36NAMHZ2-U1

MODE	SPL(dB)	LINE
COOLING	49	○——○
HEATING	53	●——●

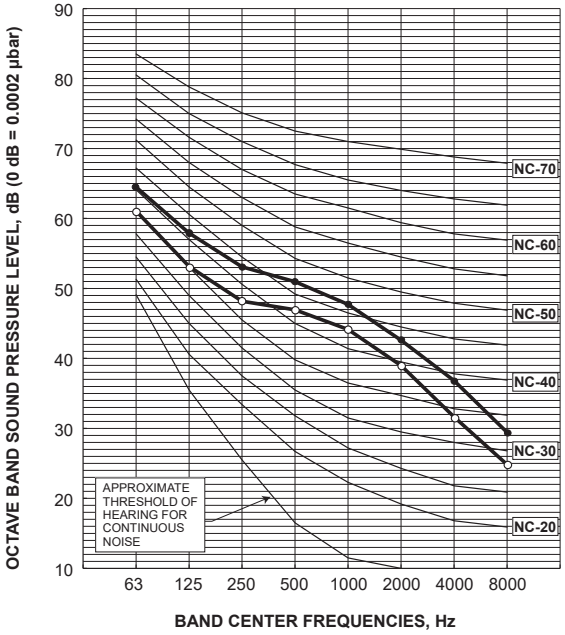

MXZ-SM42NAMHZ2-U1

MODE	SPL(dB)	LINE
COOLING	50	○——○
HEATING	54	●——●

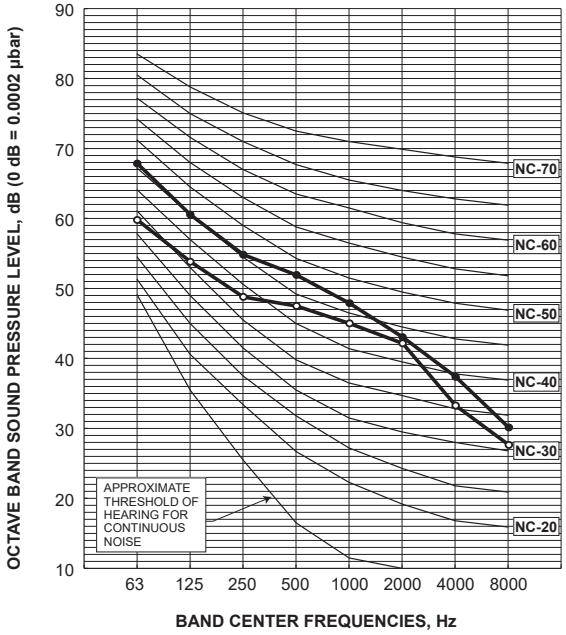

MXZ-SM48NAM2-U1
MXZ-SM48NAMHZ2-U1

MODE	SPL(dB)	LINE
COOLING	51	○——○
HEATING	54	●——●

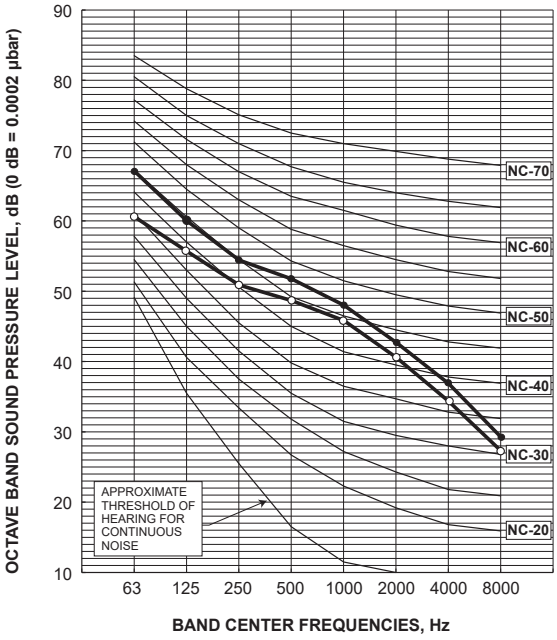

MXZ-SM60NAM2-U1

MODE	SPL(dB)	LINE
COOLING	58	○——○
HEATING	59	●——●

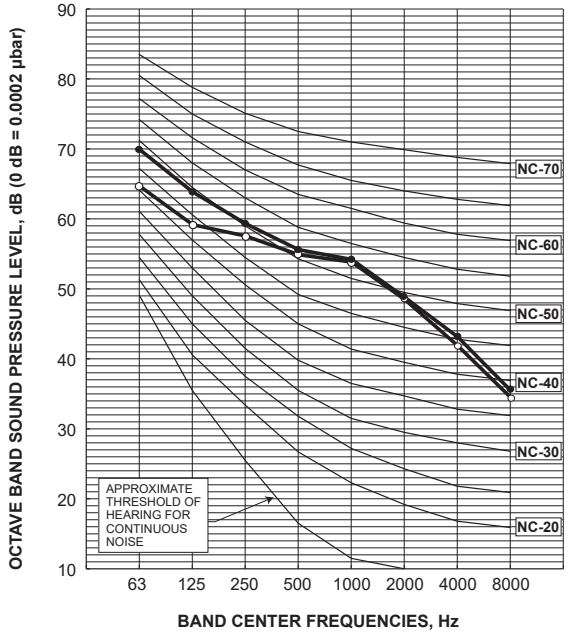

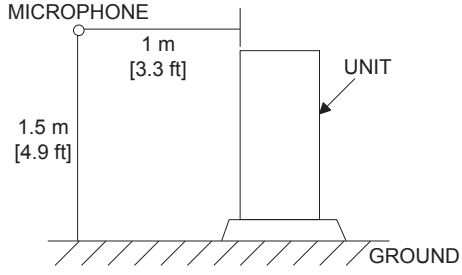

5 OUTLINES AND DIMENSIONS

Unit: mm
<inch>

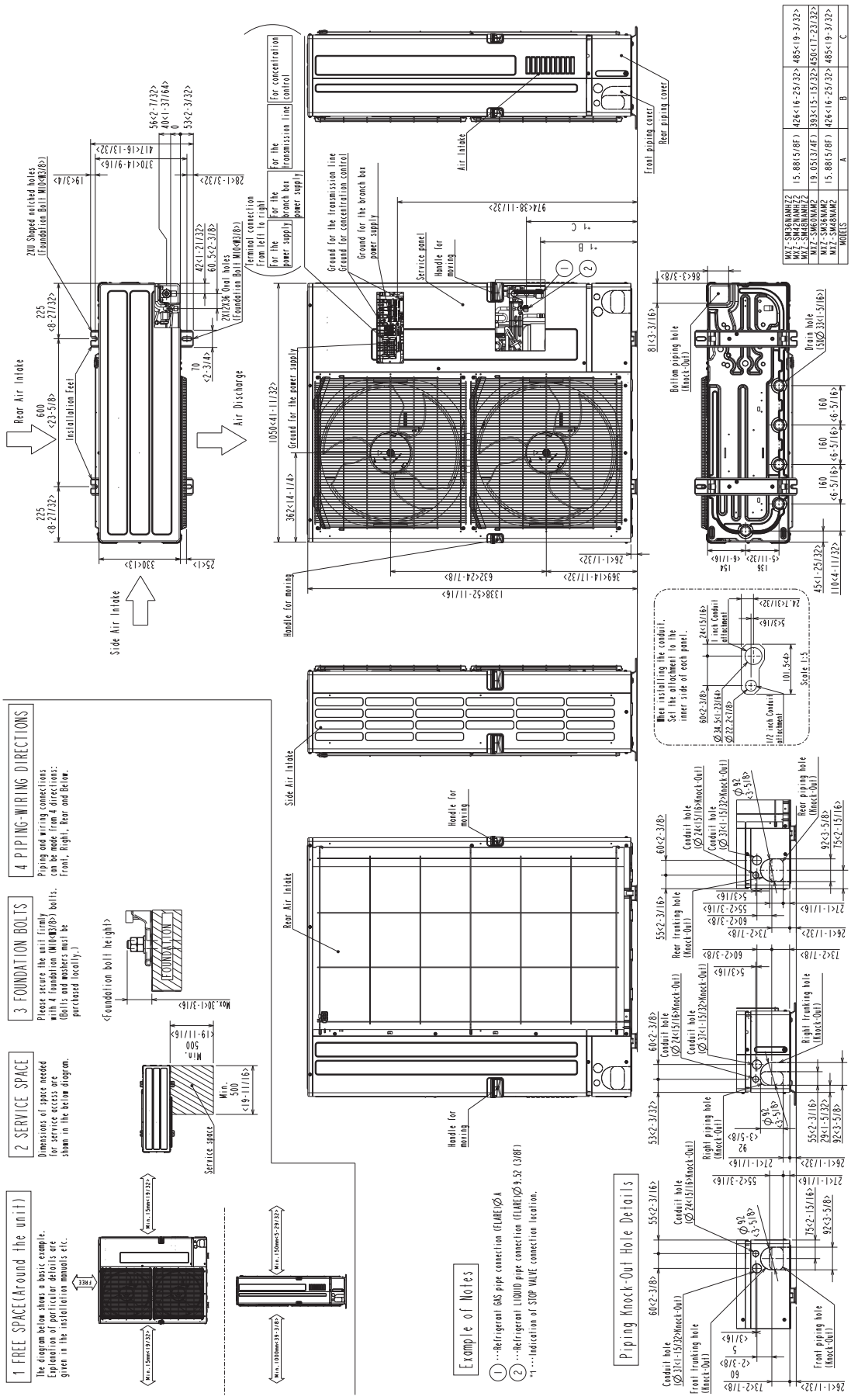

6 WIRING DIAGRAM

MXZ-SM36NAM2-U1 MXZ-SM48NAM2-U1

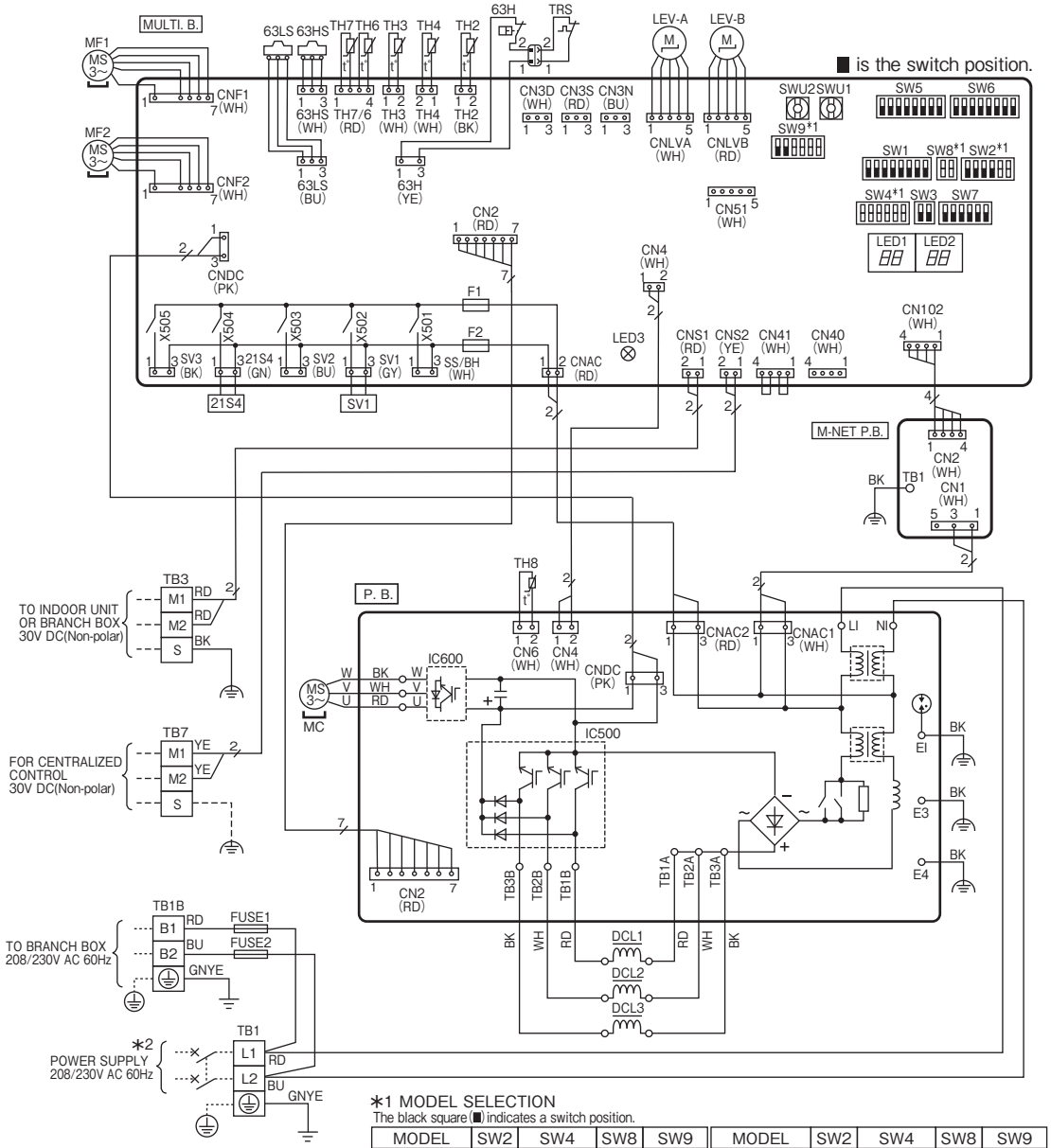

*1 MODEL SELECTION

The black square (■) indicates a switch position.

MODEL	SW2	SW4	SW8	SW9	MODEL	SW2	SW4	SW8	SW9
MXZ-SM36NAM2	ON OFF 5 6	ON OFF 1 2 3 4 5 6	ON OFF 1 2	ON OFF 3 4 5 6	MXZ-SM48NAM2	ON OFF 5 6	ON OFF 1 2 3 4 5 6	ON OFF 1 2	ON OFF 3 4 5 6

*2 Use copper supply wires.
Utiliser des fils d'alimentation en cuivre.

*3 When a Branch box is connected, SW2-5 should be ON.

【LEGEND】

SYMBOL	NAME	SYMBOL	NAME	SYMBOL	NAME
TB1	Terminal Block 〈Power Supply〉	TH8	Thermistor 〈Heat Sink〉	SW5	Switch〈Function Selection〉
TB1B	Terminal Block 〈Branch box〉	TRS	Thermal Protector	SW6	Switch〈Function Selection〉
TB3	Terminal Block 〈Indoor/Outdoor, Branch box/Outdoor Transmission Line〉	LEV-A, LEV-B	Linear Expansion Valve	SW7	Switch〈Function Selection〉
		DCL1, DCL2, DCL3	Reactor	SW8	Switch〈Model Selection〉
TB7	Terminal Block 〈Centralized Control Transmission Line〉	P.B.	Power Circuit Board	SW9	Switch〈Function/Model Selection〉
		U/V/W	Connection Terminal〈U/V/W-Phase〉	SWU1	Switch〈Unit Address Selection, ones digit〉
FUSE1, FUSE2	Fuse〈T20A L250V〉	LI	Connection Terminal〈L1-Phase〉	SWU2	Switch〈Unit Address Selection, tens digit〉
MC	Motor for Compressor	NI	Connection Terminal〈L2-Phase〉	SS/BH	Connector〈Connection for Option〉
MF1, MF2	Fan Motor	TB1A, TB2A, TB3A TB1B, TB2B, TB3B	Connection Terminal〈Reactor〉	CN3D	Connector〈Connection for Option〉
21S4	Solenoid Valve Coil〈4-Way Valve〉			CN3S	Connector〈Connection for Option〉
63H	High Pressure Switch	IC500	Converter	CN3N	Connector〈Connection for Option〉
63HS	High Pressure Sensor	IC600	Inverter	CN51	Connector〈Connection for Option〉
63LS	Low Pressure Sensor	EI, E3, E4	ConnectionTerminal〈Electrical Parts Box〉	LED1, LED2	LED〈Operation Inspection Display〉
SV1	Solenoid Valve Coil〈Bypass Valve〉	MULTI.B.	Multi Controller Circuit Board	LED3	LED〈Power Supply to Main Microcomputer〉
TH2	Thermistor〈Hic Pipe〉	SW1	Switch〈Display Selection〉	F1, F2	Fuse〈T6.3A L250V〉
TH3	Thermistor〈Outdoor Liquid Pipe〉	SW2	Switch〈Function/Model Selection〉	X501～X505	Relay
TH4	Thermistor〈Compressor〉	SW3	Switch〈Test Run〉	M-NET P.B.	M-NET Power Circuit Board
TH6	Thermistor〈Suction Pipe〉	SW4	Switch〈Model Selection〉	TB1	ConnectionTerminal〈Electrical Parts Box〉
TH7	Thermistor 〈Ambient〉				

MXZ-SM60NAM2-U1

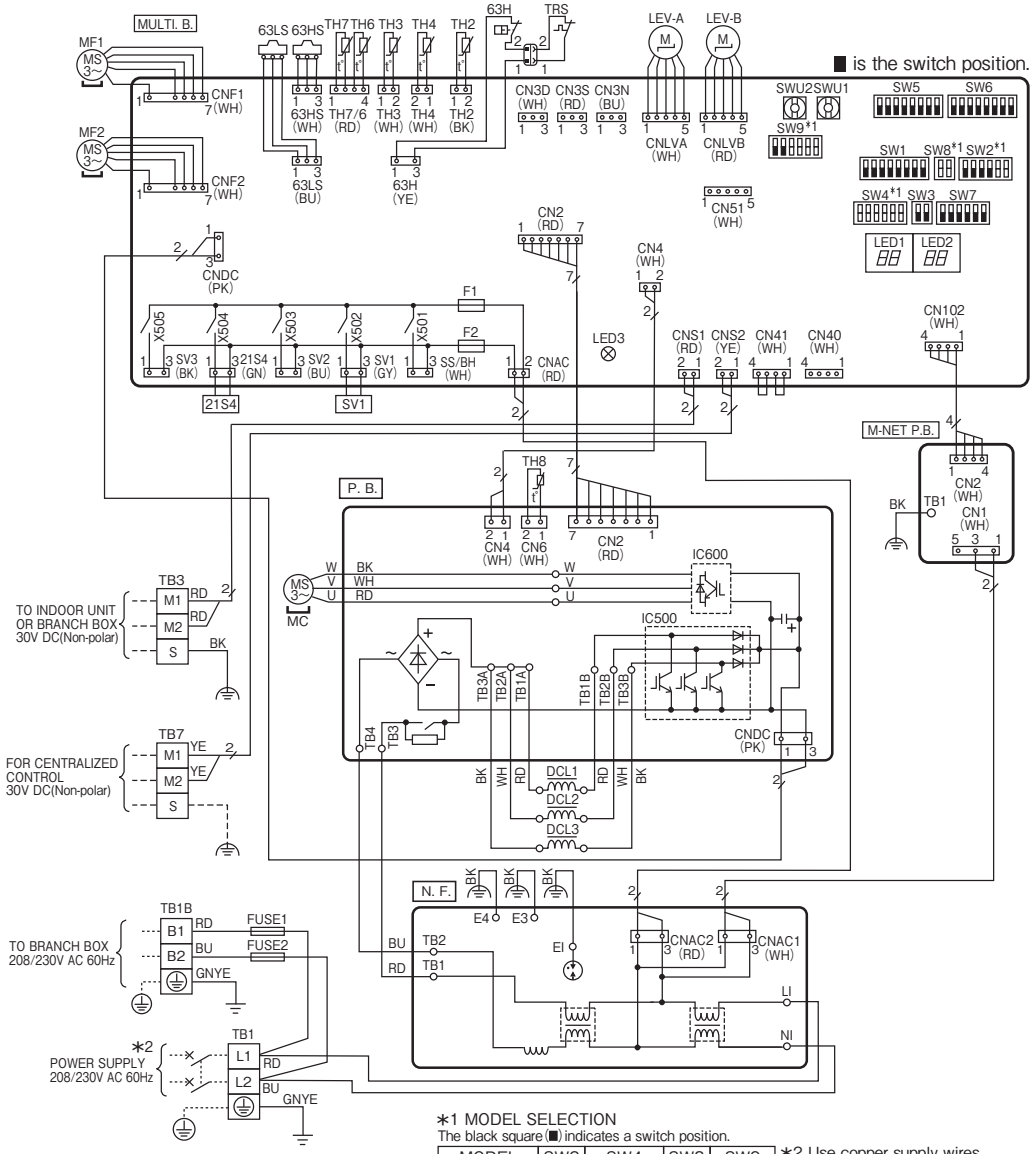

*1 MODEL SELECTION

The black square (■) indicates a switch position.

MODEL	SW2	SW4	SW8	SW9
MXZ-SM60NAM2	ON OFF 5 6	ON OFF 1 2 3 4 5 6	ON OFF 1 2	ON OFF 3 4 5 6

*2 Use copper supply wires.
Utiliser des fils d'alimentation en cuivre.

*3 When a Branch box is connected, SW2-5 should be ON.

【LEGEND】

SYMBOL	NAME	SYMBOL	NAME	SYMBOL	NAME
TB1	Terminal Block 〈Power Supply〉	TRS	Thermal Protector	SW4	Switch〈Model Selection〉
TB1B	Terminal Block 〈Branch box〉	LEV-A, LEV-B	Linear Expansion Valve	SW5	Switch〈Function Selection〉
TB3	Terminal Block 〈Indoor/Outdoor, Branch box/Outdoor Transmission Line〉	DCL1, DCL2, DCL3	Reactor	SW6	Switch〈Function Selection〉
		N.F.	Noise Filter Board	SW7	Switch〈Function Selection〉
TB7	Terminal Block 〈Centralized Control Transmission Line〉	LI	Connection Terminal〈L1-Phase〉	SW8	Switch〈Model Selection〉
		NI	Connection Terminal〈L2-Phase〉	SW9	Switch〈Function/Model Selection〉
FUSE1, FUSE2	Fuse〈T20A L250V〉	TB1, TB2	ConnectionTerminal〈Power Circuit Board〉	SWU1	Switch〈Unit Address Selection, ones digit〉
MC	Motor for Compressor	EI, E3, E4	ConnectionTerminal〈Electrical Parts Box〉	SWU2	Switch〈Unit Address Selection, tens digit〉
MF1, MF2	Fan Motor	P.B.	Power Circuit Board	SS/BH	Connector〈Connection for Option〉
21S4	Solenoid Valve Coil〈4-Way Valve〉	TB3, TB4	ConnectionTerminal〈Noise Filter Board〉	CN3D	Connector〈Connection for Option〉
63H	High Pressure Switch	U/V/W	Connection Terminal〈U/V/W-Phase〉	CN3S	Connector〈Connection for Option〉
63HS	High Pressure Sensor	TB1A, TB2A, TB3A TB1B, TB2B, TB3B	Connection Terminal〈Reactor〉	CN3N	Connector〈Connection for Option〉
63LS	Low Pressure Sensor			CN51	Connector〈Connection for Option〉
SV1	Solenoid Valve Coil〈Bypass Valve〉	IC500	Converter	LED1, LED2	LED〈Operation Inspection Display〉
TH2	Thermistor〈Hic Pipe〉	IC600	Inverter	LED3	LED〈Power Supply to Main Microcomputer〉
TH3	Thermistor〈Outdoor Liquid Pipe〉	MULTI.B.	Multi Controller Circuit Board	F1, F2	Fuse〈T6.3A L250V〉
TH4	Thermistor〈Compressor〉	SW1	Switch〈Display Selection〉	X501～X505	Relay
TH6	Thermistor〈Suction Pipe〉	SW2	Switch〈Function/Model Selection〉	M-NET P.B.	M-NET Power Circuit Board
TH7	Thermistor〈Ambient〉	SW3	Switch〈Test Run〉	TB1	ConnectionTerminal〈Electrical Parts Box〉
TH8	Thermistor〈Heat Sink〉				

MXZ-SM36NAMHZ2-U1 MXZ-SM42NAMHZ2-U1 MXZ-SM48NAMHZ2-U1

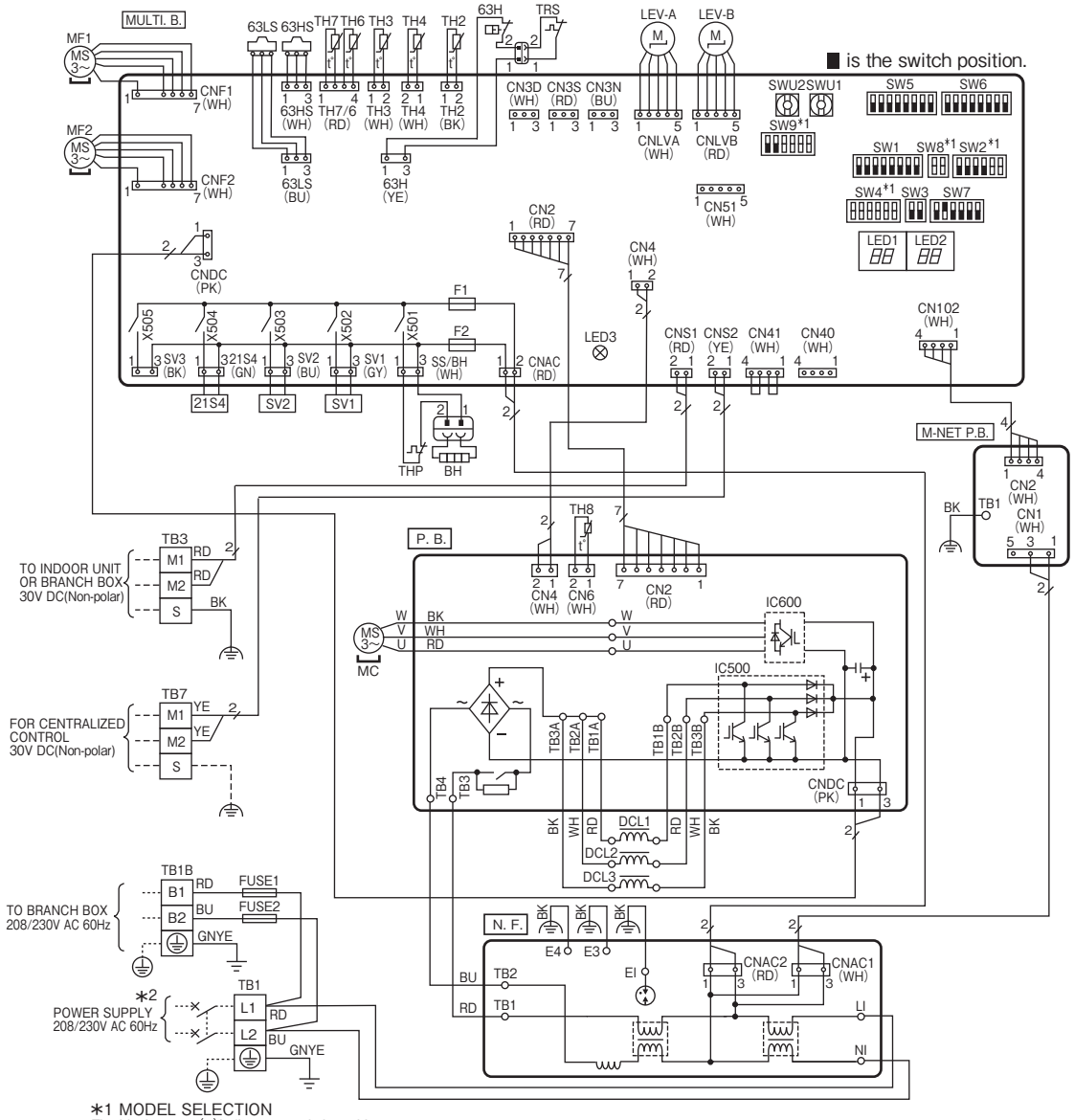

*1 MODEL SELECTION

The black square (■) indicates a switch position.

MODEL	SW2	SW4	SW8	SW9
MXZ-SM36NAMHZ2	ON OFF 5 6	ON OFF 1 2 3 4 5 6	ON OFF 1 2	ON OFF 3 4 5 6
MXZ-SM42NAMHZ2	ON OFF 5 6	ON OFF 1 2 3 4 5 6	ON OFF 1 2	ON OFF 3 4 5 6
MXZ-SM48NAMHZ2	ON OFF 5 6	ON OFF 1 2 3 4 5 6	ON OFF 1 2	ON OFF 3 4 5 6

*2 Use copper supply wires.
Utiliser des fils d'alimentation en cuivre.

*3 When a Branch box is connected, SW2-5 should be ON.

【LEGEND】

SYMBOL	NAME
TB1	Terminal Block 〈Power Supply〉
TB1B	Terminal Block 〈Branch box〉
TB3	Terminal Block 〈Indoor/Outdoor, Branch box/Outdoor Transmission Line〉
TB7	Terminal Block 〈Centralized Control Transmission Line〉
FUSE1, FUSE2	Fuse〈T20A L250V〉
MC	Motor for Compressor
MF1, MF2	Fan Motor
21S4	Solenoid Valve Coil〈4-Way Valve〉
63H	High Pressure Switch
63HS	High Pressure Sensor
63LS	Low Pressure Sensor
SV1	Solenoid Valve Coil〈Bypass Valve〉
SV2	Solenoid Valve Coil〈Switching Valve〉
BH	Base Heater
THP	Thermal Protector<Base Heater>
TH2	Thermistor〈Hic Pipe〉
TH3	Thermistor〈Outdoor Liquid Pipe〉
TH4	Thermistor〈Compressor〉
TH6	Thermistor〈Suction Pipe〉

SYMBOL	NAME
TH7	Thermistor〈Ambient〉
TH8	Thermistor〈Heat Sink〉
TRS	Thermal Protector<Compressor>
LEV-A, LEV-B	Linear Expansion Valve
DCL1, DCL2, DCL3	Reactor
N.F.	Noise Filter Board
LI	Connection Terminal〈L1-Phase〉
NI	Connection Terminal〈L2-Phase〉
TB1, TB2	ConnectionTerminal〈Power Circuit Board〉
EI, E3, E4	ConnectionTerminal〈Electrical Parts Box〉
P.B.	Power Circuit Board
TB3, TB4	ConnectionTerminal〈Noise Filter Board〉
U/V/W	Connection Terminal〈U/V/W-Phase〉
TB1A, TB2A, TB3A TB1B, TB2B, TB3B	Connection Terminal〈Reactor〉
IC500	Converter
IC600	Inverter
MULTI.B.	Multi Controller Circuit Board
SW1	Switch〈Display Selection〉
SW2	Switch〈Function/Model Selection〉

SYMBOL	NAME
SW3	Switch〈Test Run〉
SW4	Switch〈Model Selection〉
SW5	Switch〈Function Selection〉
SW6	Switch〈Function Selection〉
SW7	Switch〈Function Selection〉
SW8	Switch〈Model Selection〉
SW9	Switch〈Function/Model Selection〉
SWU1	Switch〈Unit Address Selection, ones digit〉
SWU2	Switch〈Unit Address Selection, tens digit〉
SS/BH	Connector〈Connection for Option〉
CN3D	Connector〈Connection for Option〉
CN3S	Connector〈Connection for Option〉
CN3N	Connector〈Connection for Option〉
CN51	Connector〈Connection for Option〉
LED1, LED2	LED〈Operation Inspection Display〉
LED3	LED〈Power Supply to Main Microcomputer〉
F1, F2	Fuse〈T6.3A L250V〉
X501~X505	Relay
M-NET P.B.	M-NET Power Circuit Board
TB1	ConnectionTerminal〈Electrical Parts Box〉

7 NECESSARY CONDITIONS FOR SYSTEM CONSTRUCTION

7-1. TRANSMISSION SYSTEM SETUP

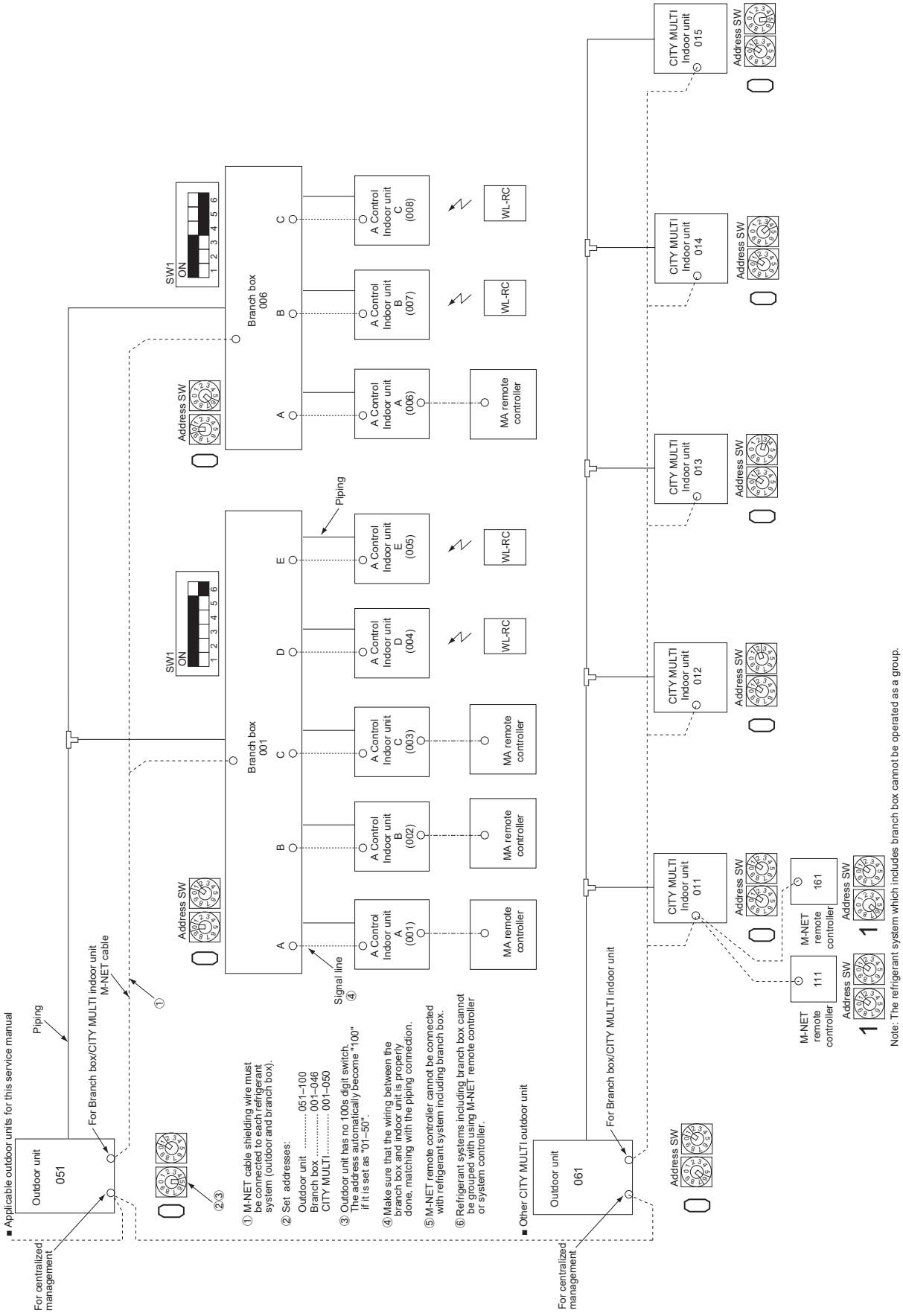

7-2. Special Function Operation and Settings for M-NET Remote Controller

For the detailed procedure of "group settings" and "paired settings", refer to the remote controller's manuals.

7-3. REFRIGERANT SYSTEM DIAGRAM

MXZ-SM36NAM2-U1
MXZ-SM48NAM2-U1

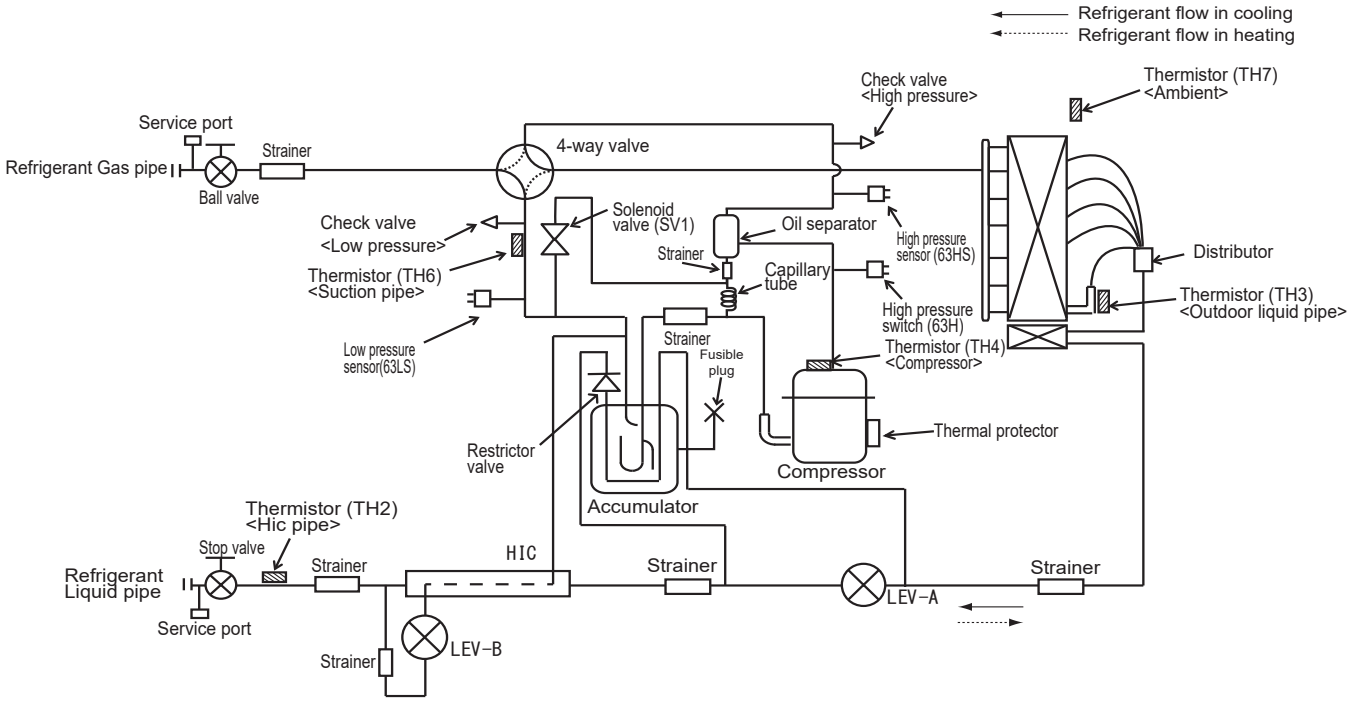

Capillary tube for oil separator [inch(mm)]: ø0.098 × ø0.031 × L39.37 (ø2.5 × ø0.8 × L1000)

MXZ-SM36NAMHZ2-U1
MXZ-SM42NAMHZ2-U1
MXZ-SM48NAMHZ2-U1

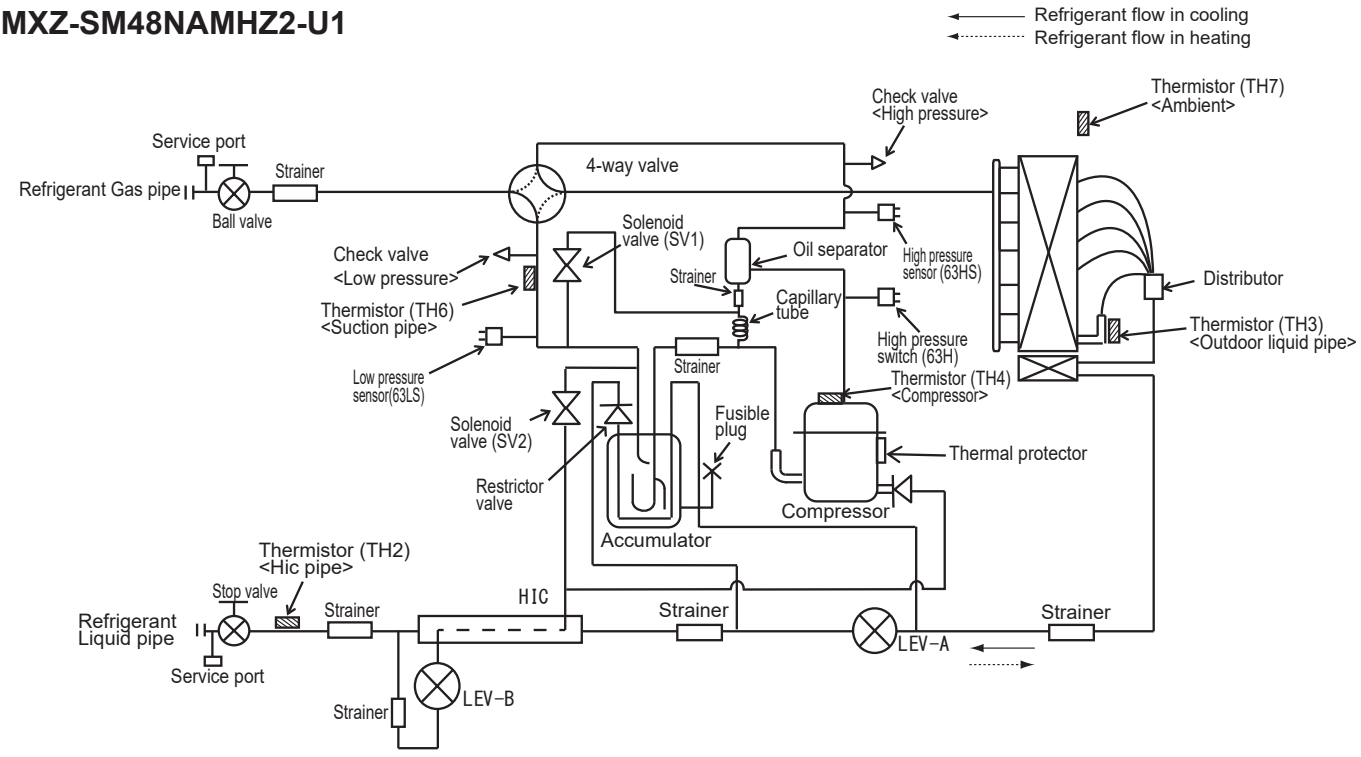

Capillary tube for oil separator [inch(mm)]: ø0.098 × ø0.031× L39.37 (ø2.5 × ø0.8 × L1000)

MXZ-SM60NAM2-U1

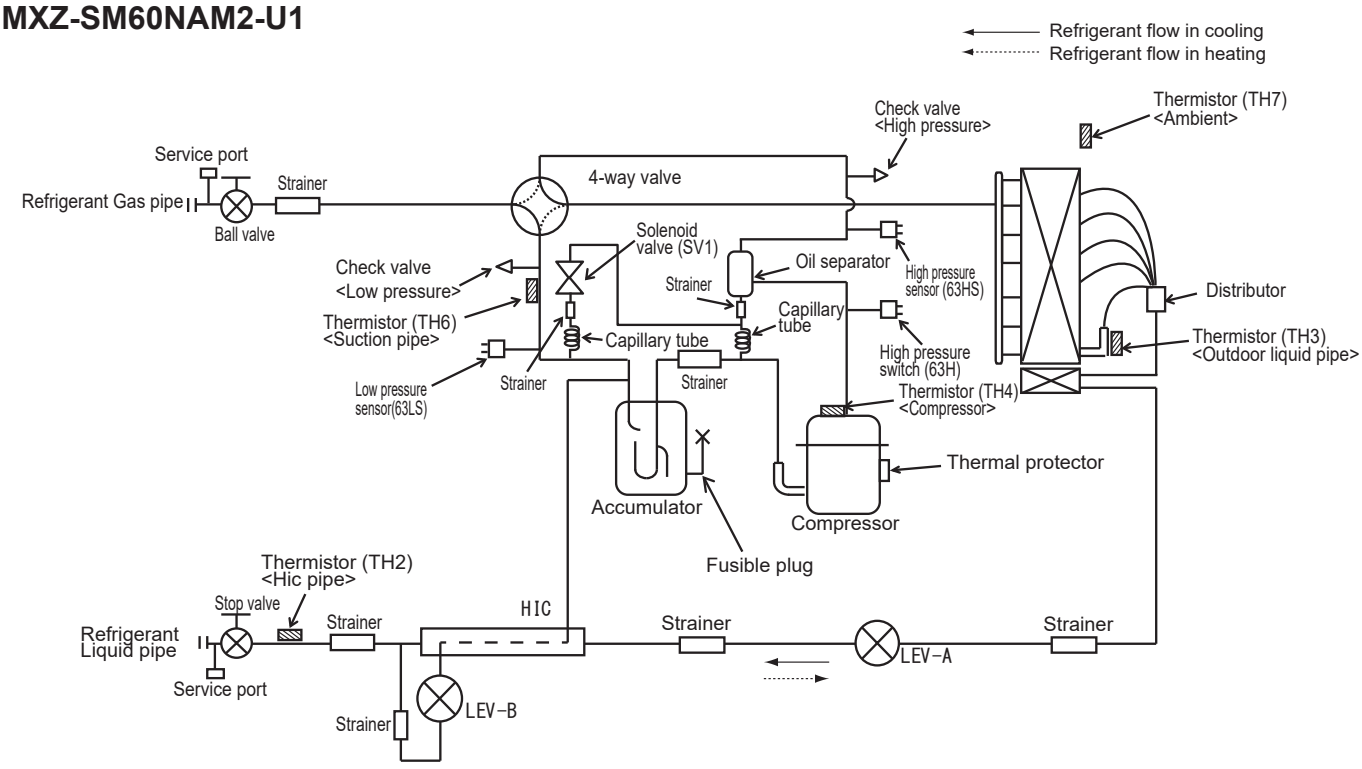

Capillary tube for oil separator [inch(mm)]: ø0.098 × ø0.031 × L31.50 (ø2.5 × ø0.8 × L800)
Capillary tube for solenoid valve [inch(mm)]: ø0.157 × ø0.117 × L19.685 (ø4.0 × ø3.0 × L500)

MXZ-SM36NAM2-U1 MXZ-SM48NAM2-U1

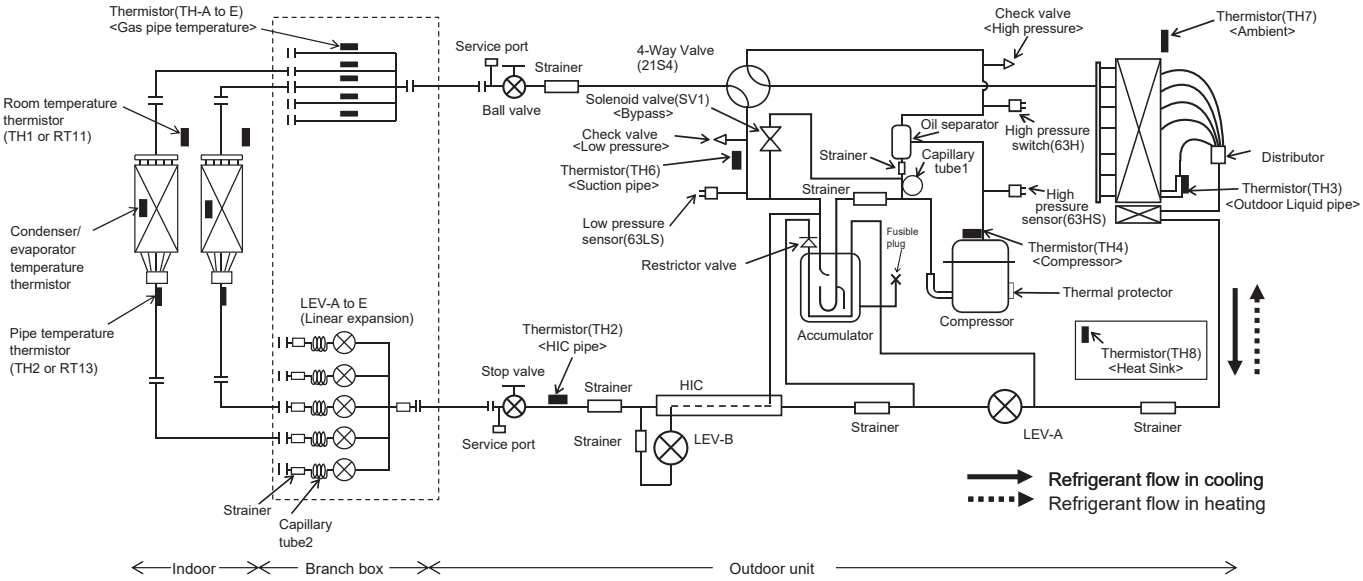

Unit: inch (mm)

	Capillary tube 1 (For return of oil from oil separator)	Capillary tube 2 behind LEV (in cooling mode)
Outdoor unit	ø0.098 × ø0.031 × L(39-1/2) (ø2.5 × ø0.8 × L1000)	———
Branch box	———	(ø0.157 × ø0.117 × L(5-1/8)) × 5 ((ø4.0 × ø3.0 × L130) × 5)
	———	(ø0.157 × ø0.117 × L(5-1/8)) × 3 ((ø4.0 × ø3.0 × L130) × 3)

MXZ-SM36NAMHZ2-U1 MXZ-SM42NAMHZ2-U1 MXZ-SM48NAMHZ2-U1

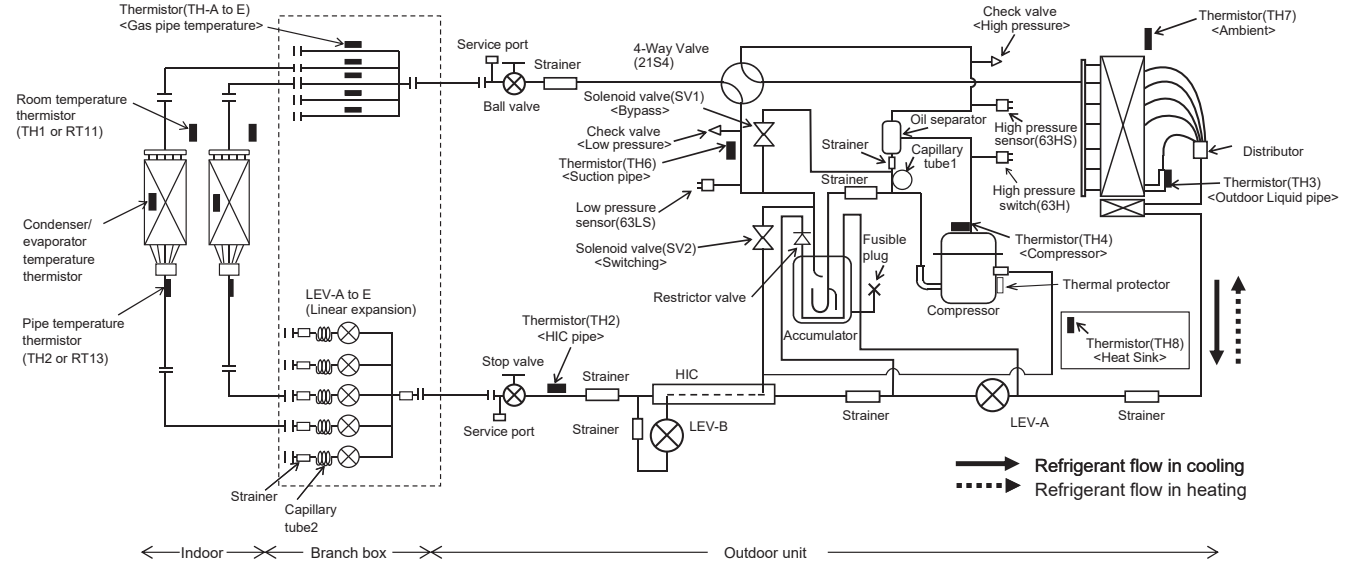

Unit: inch (mm)

	Capillary tube 1 (For return of oil from oil separator)	Capillary tube 2 behind LEV (in cooling mode)
Outdoor unit	ø0.098 × ø0.031 × L(39-1/2) (ø2.5 × ø0.8 × L1000)	———
Branch box	———	(ø0.157 × ø0.117 × L(5-1/8)) × 5 ((ø4.0 × ø3.0 × L130) × 5)
	———	(ø0.157 × ø0.117 × L(5-1/8)) × 3 ((ø4.0 × ø3.0 × L130) × 3)

MXZ-SM60NAM2-U1

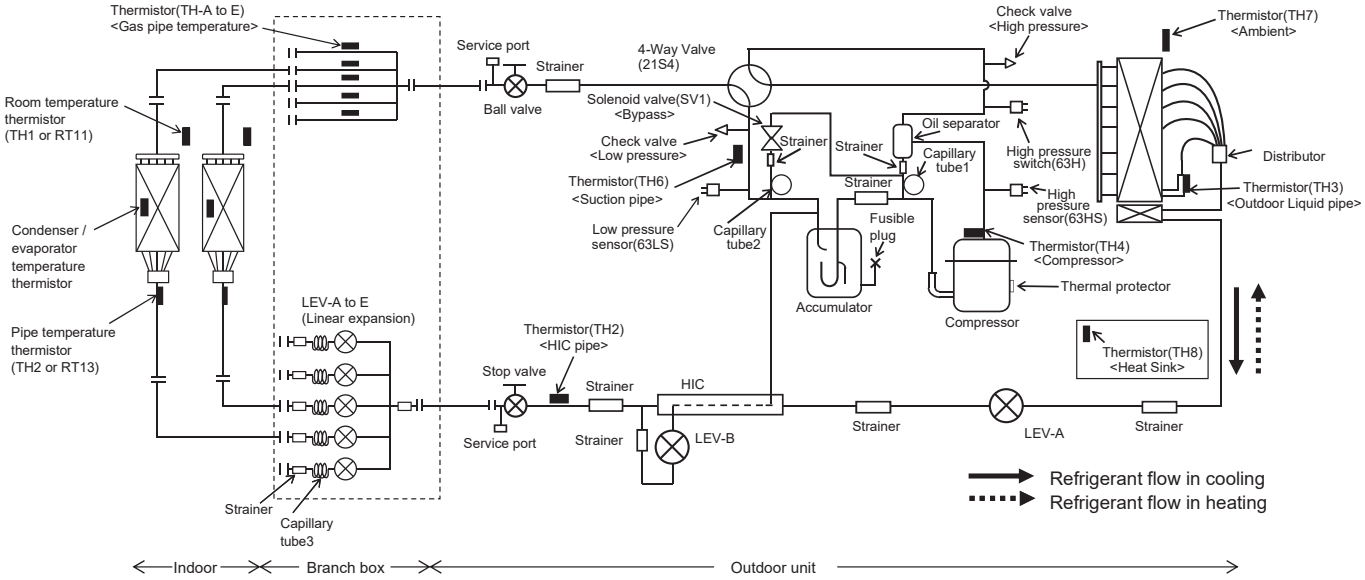

Unit: inch (mm)

	Capillary tube 1 (For return of oil from oil separator)	Capillary tube 2 (For solenoid valve (SV1))	Capillary tube 3 behind LEV (in cooling mode)
Outdoor unit	ø0.098 × ø0.031 × L(39-1/2) (ø2.5 × ø0.8 × L800)	ø0.157 × ø0.117 × L(19-5/8) (ø4.0 × ø3.0 × L500)	———
Branch box	———	———	(ø0.157 × ø0.117 × L(5-1/8)) × 5 ((ø4.0 × ø3.0 × L130) × 5)
	———	———	(ø0.157 × ø0.117 × L(5-1/8)) × 3 ((ø4.0 × ø3.0 × L130) × 3)

7-4. SYSTEM CONTROL

7-4-1. Example for the System

- Example for wiring control cables, wiring method and address setting, permissible lengths, and the constraint items are listed in the standard system with detailed explanation.

A. Example of an M-NET remote controller system (address setting is necessary.)

Example of wiring control cables	Wiring Method and Address Setting

1. Standard operation

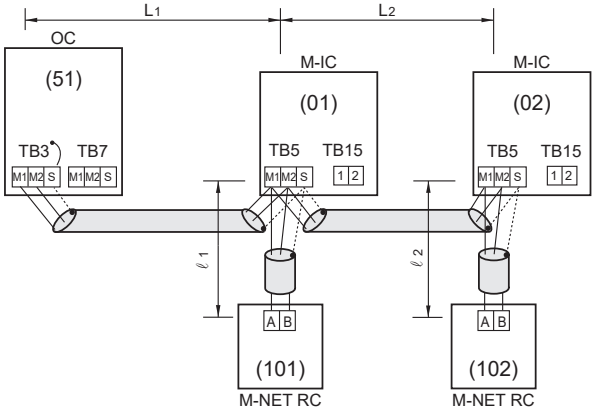

- 1 M-NET remote controller for each CITY MULTI series indoor unit
- There is no need for setting the 100 position on the M-NET remote controller.

a. Use feed wiring to connect terminals M1 and M2 on transmission cable block (TB3) for the outdoor unit (OC) to terminals M1 and M2 on the transmission cable block (TB5) of each CITY MULTI series indoor unit (M-IC). Use non-polarized 2-core wire.

b. Connect terminals M1 and M2 on transmission cable terminal block (TB5) for each indoor unit with the terminal block (TB6) for M-NET the remote controller (M-NET RC).

c. Set the address setting switch (on outdoor unit P.C.B) as shown below.

Unit	Range	Setting Method
CITY MULTI series indoor unit (M-IC)	001 to 050	—
Outdoor unit (OC)	051 to 100	Use the smallest address of all the indoor unit plus 50.
M-NET Remote controller (M-NET RC)	101 to 150	Indoor unit address plus 100

2. Operation using 2 M-NET remote controllers

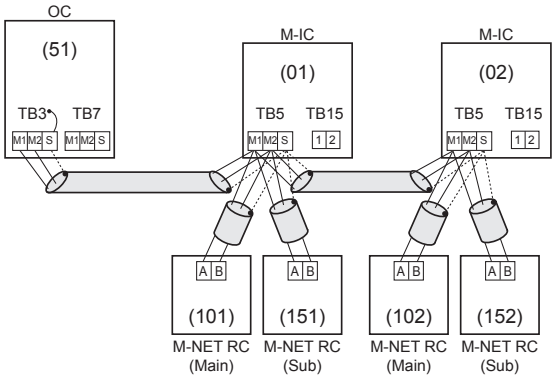

- Using 2 M-NET remote controllers for each CITY MULTI series indoor unit.

a. Same as above 1.a

b. Same as above 1.b

c. Set address switch (on outdoor unit P.C.B) as shown below.

Unit	Range	Setting Method
CITY MULTI series indoor unit (M-IC)	001 to 050	—
Outdoor unit (OC)	051 to 100	Use the smallest address of all the indoor units plus 50.
Main M-NET Remote Controller (M-NET RC)	101 to 150	Indoor unit address plus 100
Sub M-NET Remote Controller (M-NET RC)	151 to 200	Indoor unit address plus 150

3. Group operation

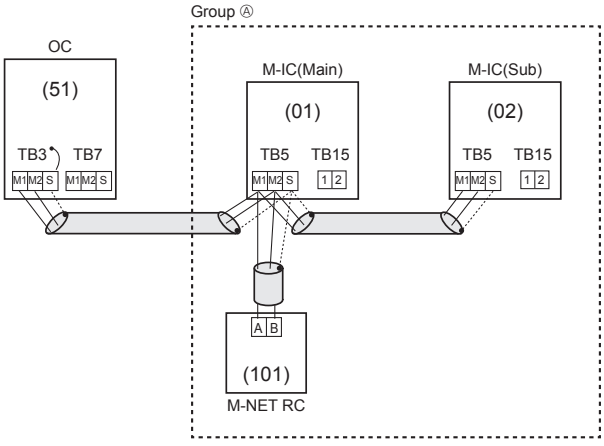

- Multiple CITY MULTI series indoor units operated together by 1 M-NET remote controller

a. Same as above 1.a

b. Connect terminals M1 and M2 on transmission cable terminal block (TB5) of the M-IC main unit with the most recent address within the same CITY MULTI series indoor unit (M-IC) group to terminal block (TB6) on the M-NET remote controller.

c. Set the address setting switch (on outdoor unit P.C.B) as shown below.

Unit	Range	Setting Method
M-IC (Main)	001 to 050	Use the smallest address within the same group of CITY MULTI series indoor units.
M-IC (Sub)	001 to 050	Use an address, other than that of the M-IC (Main) from among the units within the same group of indoor units. This must be in sequence with the M-IC (Main).
Outdoor unit	051 to 100	Use the smallest address of all the CITY MULTI series indoor units plus 50.
Main M-NET Remote Controller (M-NET RC)	101 to 150	Set at an M-IC (Main) address within the same group plus 100.

d. Use the CITY MULTI series indoor unit (M-IC) within the group with the most functions as the M-IC (Main) unit.

Combinations of 1 through 3 above are possible.

• **Name, Symbol and the Maximum Remote controller Units for Connection**

Name	Symbol	Maximum units for connection
Outdoor unit	OC	—
CITY MULTI series indoor unit	M-IC	Refer to "3. SPECIFICATIONS".
M-NET remote controller	M-NET RC	Maximum 2 M-NET RC for 1 indoor unit, Maximum 12 M-NET RC for 1 OC

Permissible Lengths	Constraint items
Indoor/outdoor transmission line Maximum length AWG 16 [1.25 mm²] $L_1 + L_2 \leq$ 656 ft [200 m] M-NET Remote controller cable length 1. If AWG 20 to AWG 16 [0.5 to 1.25 mm²] ℓ_1, $\ell_2 \leq$ 33ft [10 m] 2. If the length exceeds 33ft [10 m], the exceeding section should be AWG 16 [1.25 mm²] and that section should be a value within the total extension length of the transmission cable and maximum transmission cable length. (L_3)	• M-NET remote controller (M-NET RC) and MA remote controller (MA RC) cannot be used together. • Do not connect anything with TB15 of CITY MULTI series indoor unit (M-IC). 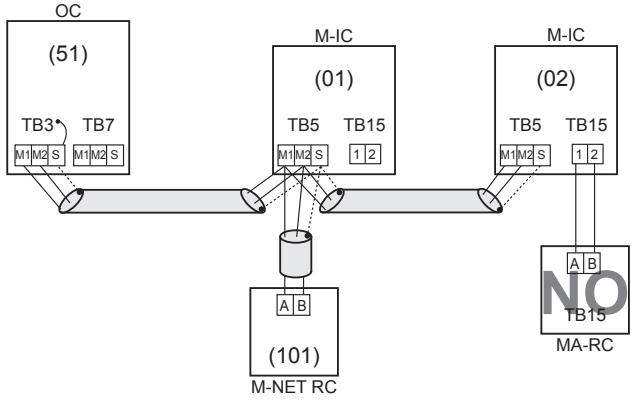
Same as above	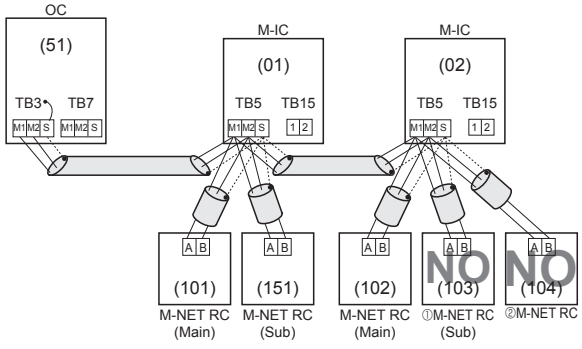 ① Use the CITY MULTI series indoor unit (M-IC) address plus 150 as the sub M-NET remote controller address. In this case, it should be 152. ② 3 or more M-NET remote controllers (M-NET RC) cannot be connected to 1 CITY MULTI series indoor unit.
Same as above	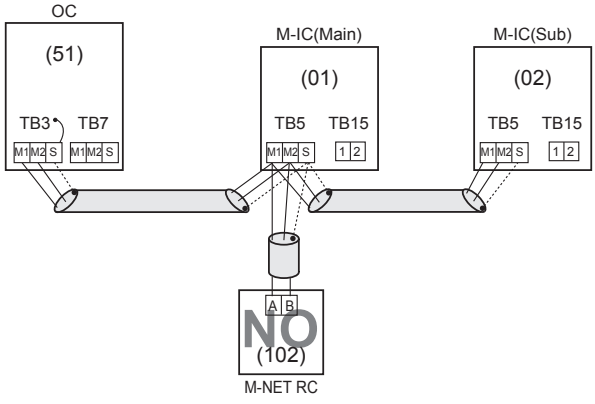 ① The M-NET remote controller address is the CITY MULTI series indoor unit main address plus 100. In this case, it should be 101.

B. Example of a group operation system with 2 or more outdoor units and an M-NET remote controller.
(Address settings are necessary.)

Examples of Transmission Cable Wiring

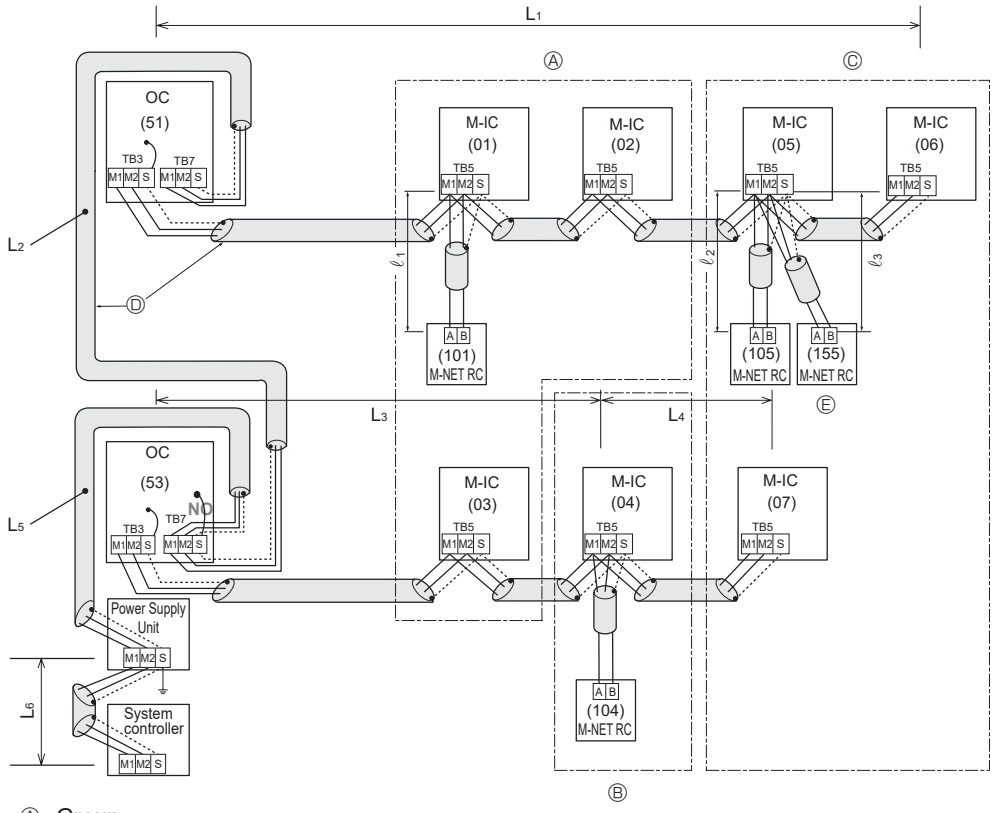

Ⓐ: Group
Ⓑ: Group
Ⓒ: Group
Ⓓ: Shielded Wire
Ⓔ: Sub M-NET Remote Controller
( ): Address example

Wiring Method Address Settings

a. Always use shielded wire when making connections between the outdoor unit (OC) and the CITY MULTI series indoor unit (M-IC), as well for all OC-OC, and IC-IC wiring intervals.
b. Use feed wiring to connect terminals M1 and M2 and the ground terminal on the transmission cable terminal block (TB3) of each outdoor unit (OC) to terminals M1 and M2 on the terminal S on the transmission cable terminal block of the CITY MULTI series indoor unit (M-IC).
c. Connect terminals M1 and M2 on the transmission cable terminal block of the CITY MULTI series indoor unit (M-IC) that has the most recent address within the same group to the terminal block on the M-NET remote controller (M-NET RC).
d. Connect together terminals M1, M2 and terminal S on the terminal block for centralized control (TB7) for the outdoor unit (OC).
e. DO NOT change the jumper connector CN41 on outdoor multi controller circuit board.
f. The earth processing of S terminal for the centralized control terminal block (TB7) is unnecessary. Connect the terminal S on the power supply unit with the earth.
g. Set the address setting switch as follows.

Unit	Range	Setting Method
M-IC (Main)	01 to 50	Use the smallest address within the same group of CITY MULTI series indoor units.
M-IC (Sub)	01 to 50	Use an address, other than the M-IC (Main) in the same group of CITY MULTI series indoor units. This must be in sequence with the M-IC (Main).
Outdoor Unit	51 to 100	Use the smallest address of all the CITY MULTI series indoor units plus 50. The address automatically becomes “100” if it is set as “01–50”.
Main M-NET Remote Controller	101 to 150	Set at an M-IC (Main) address within the same group plus 100.
Sub M-NET Remote Controller	151 to 200	Set at an M-IC (Main) address within the same group plus 150.
MA Remote Controller	—	Address setting is not necessary. (Main/sub setting is necessary.)

h. The group setting operations among the multiple CITY MULTI series indoor units are done by the M-NET remote controller (M-NET RC) after the electrical power has been turned on.

• **Name, Symbol, and the Maximum Units for Connection**

Permissible Length	• Maximum line length via outdoor unit: $L_1+L_2+L_3+L_4$, $L_3+L_4+L_5+L_6$, $L_1+L_2+L_5+L_6 \leq$ 1640 ft [500 m] (AWG16 [1.25 mm²]) • Indoor/outdoor transmission line Maximum length: L_1, L_3+L_4, L_2+L_5, $L_6 \leq$ 656 ft [200 m] (AWG16 [1.25 mm²]) • M-NET Remote controller cable length: $\ell_1, \ell_2+\ell_3 \leq$ 33 ft [10 m] (AWG20 to AWG16 [0.5 to 1.25 mm²]) If the length exceeds 33 ft [10 m], use an AWG16 [1.25 mm²] shielded wire. The section of the cable that exceeds 33 ft [10 m] must be included in the max length via outdoor units and max transmission cable length.
Prohibited items	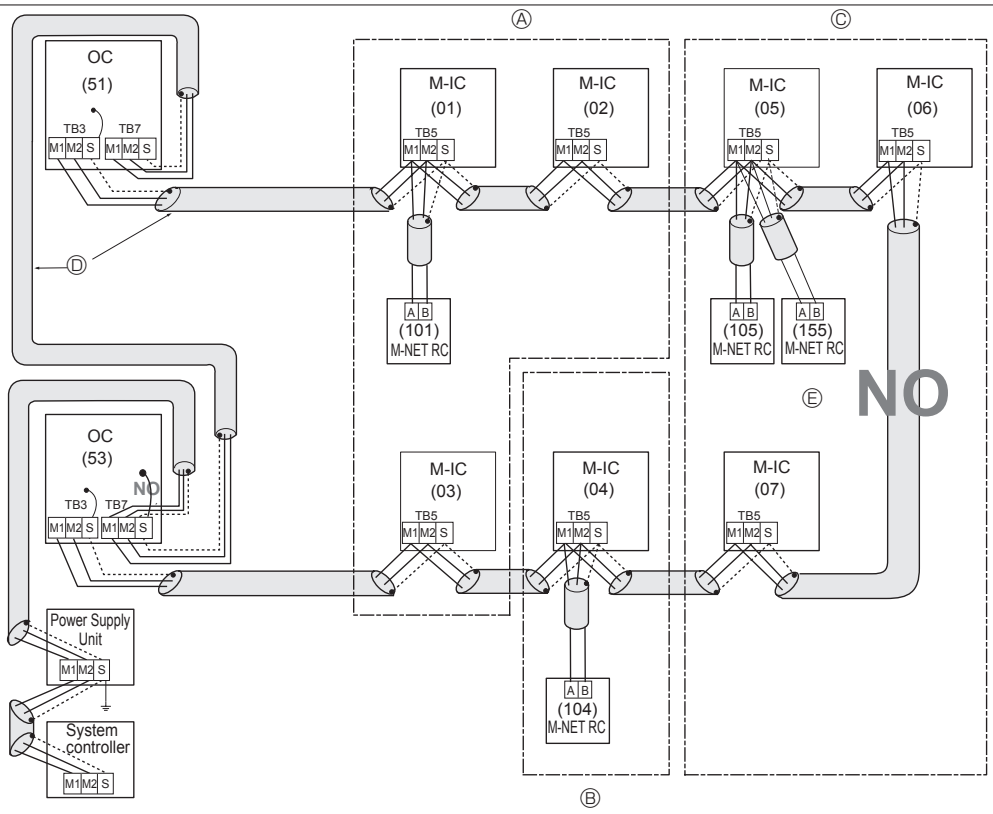 Ⓐ : Group Ⓑ : Group Ⓒ : Group Ⓓ : Shielded Wire Ⓔ : Sub M-NET Remote Controller ( ): Address example • Never connect together the terminal blocks (TB5) for transmission wires for CITY MULTI series indoor unit (M-IC) that have been connected to different outdoor units (OC). • Set all addresses to ensure that they are not overlapped. • M-NET remote controller and MA remote controller cannot be connected with the CITY MULTI series indoor unit of the same group wiring together.

C. Example of an MA remote controller system (address setting is not necessary.)
NOTE: In the case of same group operation, need to set the address that is only main CITY MULTI series indoor unit.

Example of wiring control cables	Wiring Method and Address Setting
1. Standard operation 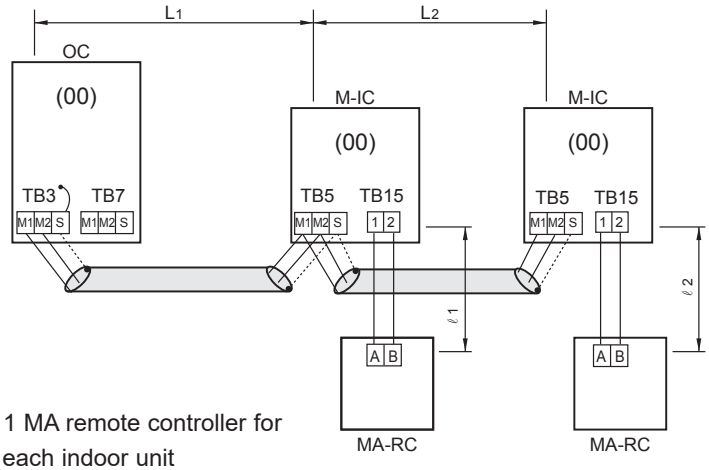 • 1 MA remote controller for each indoor unit	a. Use feed wiring to connect terminals M1 and M2 on transmission cable block (TB3) for the outdoor unit (OC) to terminals M1 and M2 on the transmission cable block (TB5) of each CITY MULTI series indoor unit (M-IC). Use non-polarized 2-core wire. b. Connect terminals 1 and 2 on transmission cable terminal block (TB15) for each CITY MULTI series indoor unit with the terminal block for the MA remote controller (MA-RC).
2. Operation using 2 remote controllers 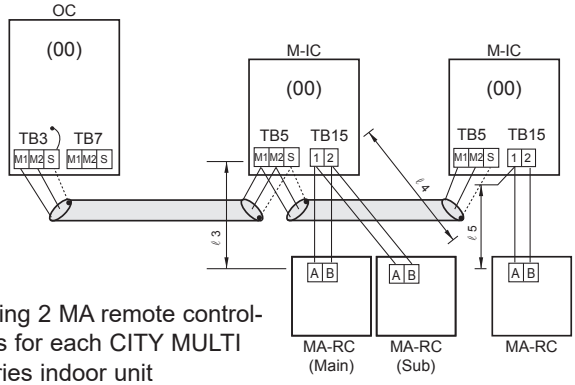 • Using 2 MA remote controllers for each CITY MULTI series indoor unit	a. The same as above a b. The same as above b c. In the case of using 2 remote controllers, connect terminals 1 and 2 on transmission cable terminal block (TB15) for each indoor unit with the terminal block for 2 MA remote controllers. · Set either one of the controllers to "sub remote controller". Refer to the installation manual of MA remote controller.
3. Group operation 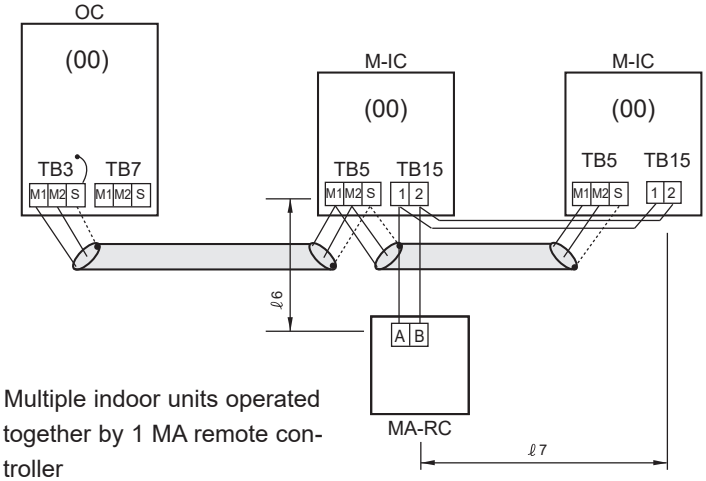 • Multiple indoor units operated together by 1 MA remote controller	a. The same as above a b. The same as above b c. In the case of group operation using MA remote controller (MA-RC), connect terminals 1 and 2 on transmission cable terminal block (TB15) of each CITY MULTI series indoor unit. Use non-polarized 2-core wire. d. In the case of same group operation, need to set the address that is only main CITY MULTI series indoor unit. Please set the smallest address within number 01–50 of the CITY MULTI series indoor unit with the most functions in the same group.
Combinations of 1 through 3 above are possible.	

Permissible Lengths	Prohibited items
Indoor/outdoor transmission line Maximum length: $L_1 + L_2 \leq$ 656 ft [200 m] (AWG 16 [1.25 mm²]) MA remote controller cable length: ℓ_1, $\ell_2 \leq$ 656 ft [200 m] (AWG 22 to AWG 16 [0.3 to 1.25 mm²])	The MA remote controller and the M-NET remote controller cannot be used together with the CITY MULTI series indoor unit of the same group. M-NET remote controller cannot be connected without address setting. 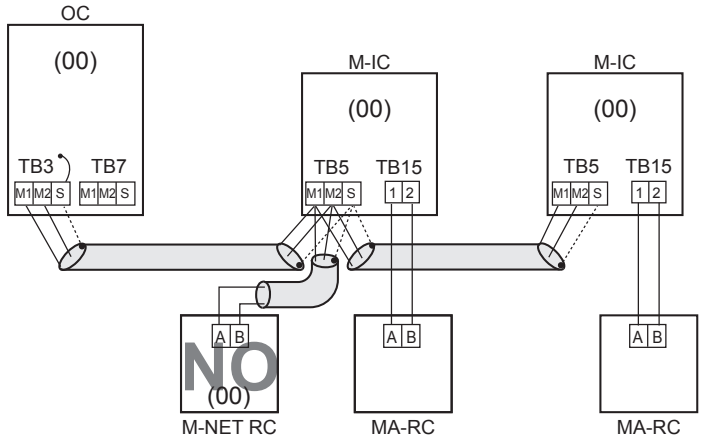
Indoor/outdoor transmission line Maximum length: $L_1 + L_2 \leq$ 656 ft [200 m] (AWG 16 [1.25 mm²]) MA remote controller cable length: $\ell_3 + \ell_4$, $\ell_5 \leq$ 656 ft [200 m] (AWG 22 to AWG 16 [0.3 to 1.25 mm²])	3 MA remote controllers or more cannot be connected with the CITY MULTI series indoor unit of the same group. 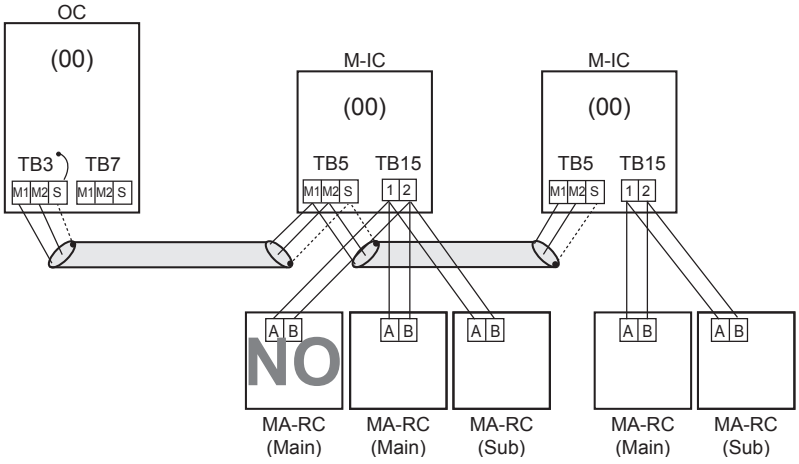
Indoor/outdoor transmission line Maximum length: $L_1 + L_2 \leq$ 656 ft [200 m] (AWG 16 [1.25 mm²]) MA remote controller cable length: $\ell_6 + \ell_7 \leq$ 656 ft [200 m] (AWG 22 to AWG 16 [0.3 to 1.25 mm²])	The second MA remote controller is connected with the terminal block (TB15) for the MA remote controller of the same CITY MULTI series indoor unit (M-IC) as the first MA remote control. 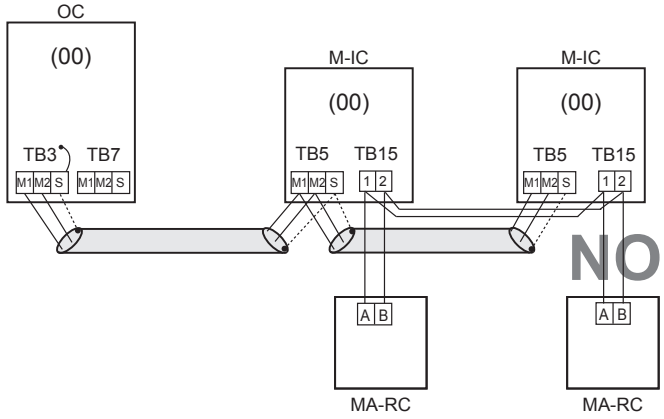

D. Example of a group operation with 2 or more outdoor units and an MA remote controller.
(Address settings are necessary.)

Examples of Transmission Cable Wiring

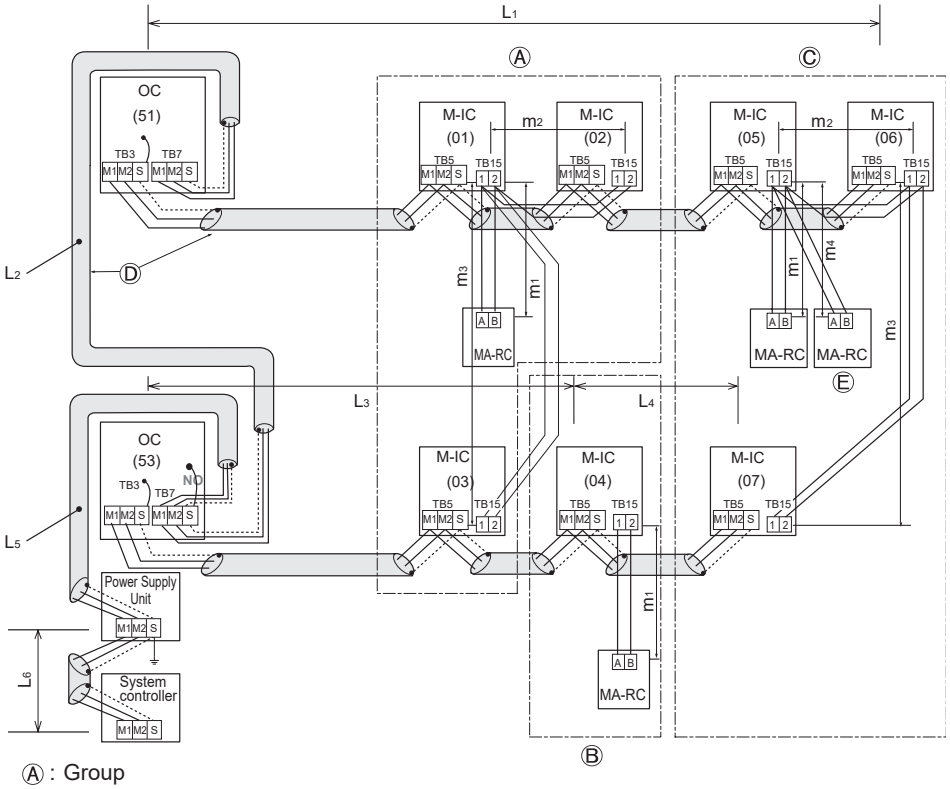

Ⓐ : Group
Ⓑ : Group
Ⓒ : Group
Ⓓ : Shielded Wire
Ⓔ : Sub MA Remote Controller
( ): Address example

Wiring Method Address Settings

a. Always use shielded wire when making connections between the outdoor unit (OC) and the CITY MULTI series indoor unit (M-IC), as well for all OC-OC, and IC-IC wiring intervals.
b. Use feed wiring to connect terminals M1 and M2 and the ground terminal on the transmission cable terminal block (TB3) of each outdoor unit (OC) to terminals M1 and M2 on the terminal S on the transmission cable terminal block of the CITY MULTI series indoor unit (M-IC).
c. Connect terminals 1 and 2 on the terminal block for MA remote controller line (TB15) on the indoor unit (IC) to the terminal block on the MA remote controller (MA). (Nonpolarized two-wire).
d. Connect together terminals M1, M2 and terminal S on the terminal block for centralized control (TB7) for the outdoor unit (OC).
e. DO NOT change the jumper connector CN41 on outdoor multi controller circuit board.
f. The earth processing of S terminal for the centralized control terminal block (TB7) is unnecessary. Connect the terminal S on the power supply unit with the earth.
g. Set the address setting switch as follows.

Unit	Range	Setting Method
M-IC (Main)	01 to 50	Use the smallest address within the same group of indoor units.
M-IC (Sub)	01 to 50	Use an address, other than the M-IC (Main) in the same group of CITY MULTI series indoor units. This must be in sequence with the M-IC (Main).
Outdoor Unit	51 to 100	Use the smallest address of all the indoor units plus 50. The address automatically becomes “100” if it is set as “01–50”.
Main M-NET Remote Controller	101 to 150	Set at an M-IC (Main) address within the same group plus 100.
Sub M-NET Remote Controller	151 to 200	Set at an M-IC (Main) address within the same group plus 150.
MA Remote Controller	—	Address setting is not necessary. (Main/sub setting is necessary.)

h. The group setting operations among the multiple CITY MULTI series indoor unit is done by the M-NET remote controller (M-NET RC) after the electrical power has been turned on.

• **Name, Symbol, and the Maximum Units for Connection**

Permissible Length	Maximum line length via outdoor unit (M-NET cable): $L_1+L_2+L_3+L_4$ and $L_1+L_2+L_6+L_7 \leq$ 1640 ft [500 m] (AWG 16 [1.25 mm²] or more) Indoor/outdoor transmission line Maximum length (M-NET cable): L_1 and L_3+L_4 and L_2+L_6 and $L_7 \leq$ 656 ft [200 m] (AWG 16 [1.25 mm²] or more) MA Remote controller cable length: m_1 and $m_1+m_2+m_3$ and $m_1+m_2+m_3+m_4 \leq$ 656 ft [200 m] (AWG 22 to AWG 16 [0.3 to 1.25 mm²])
Prohibited items	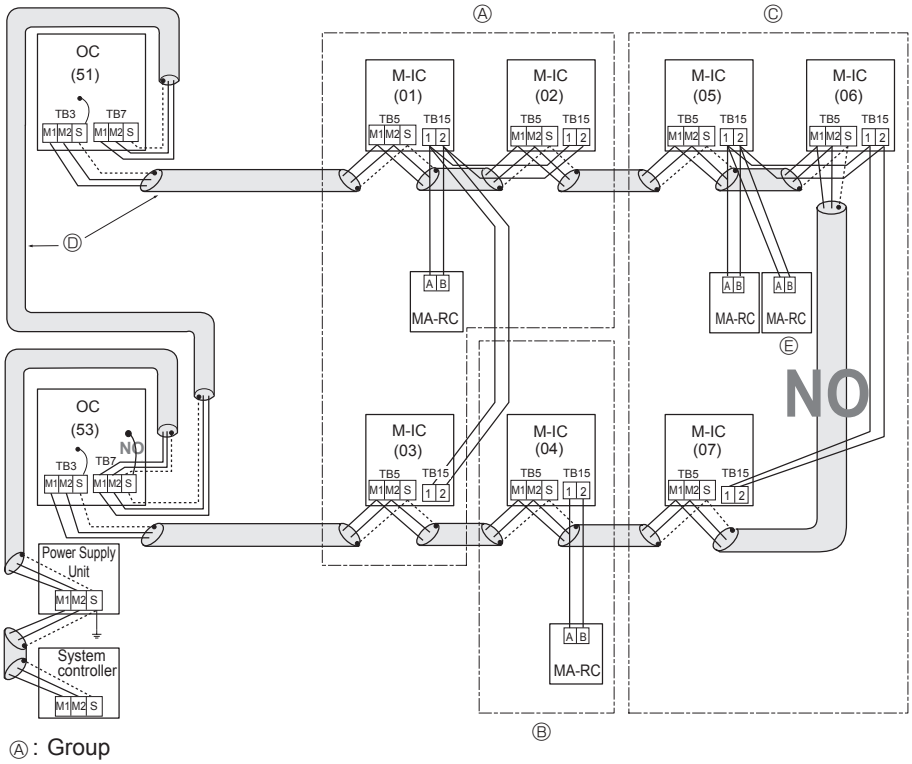 Ⓐ: Group Ⓑ: Group Ⓒ: Group Ⓓ: Shielded Wire Ⓔ: Sub MA Remote Controller ( ): Address example • Never connect together the terminal blocks (TB5) for transmission wires for CITY MULTI series indoor unit (M-IC) that have been connected to different outdoor units (OC). • M-NET remote controller and MA remote controller cannot be connected with the CITY MULTI series indoor unit of the same group wiring together.

E. Example of a system using Branch Box and A-Control indoor unit

Examples of Transmission Cable Wiring

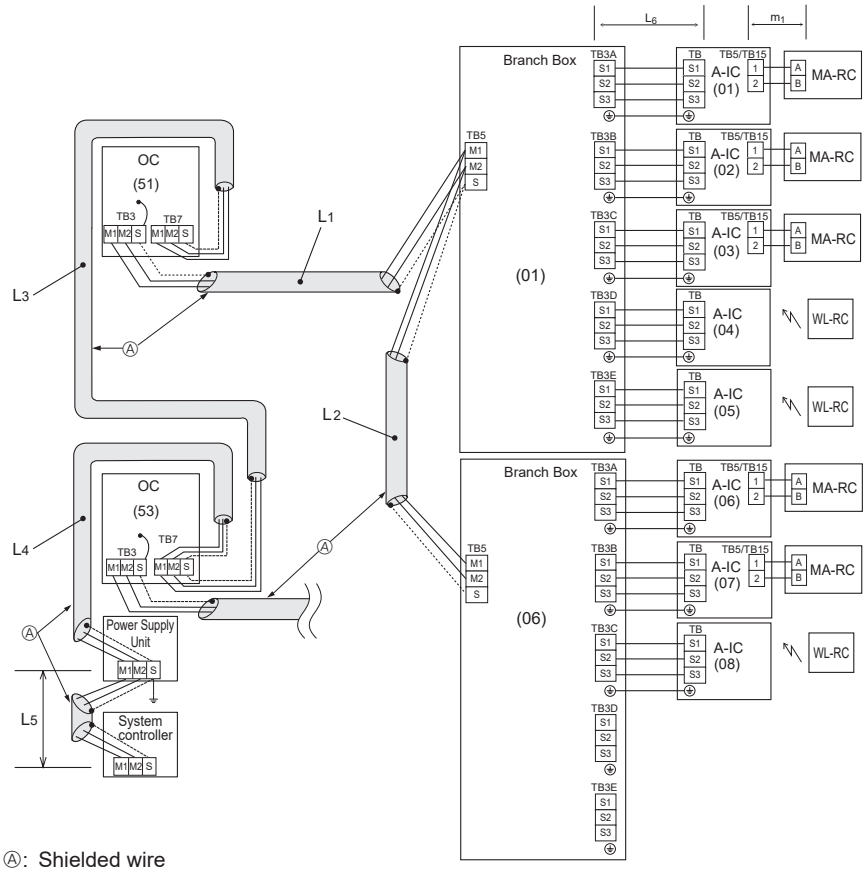

Ⓐ: Shielded wire
( ): Address example

Wiring Method Address Settings

a. Always use shielded wire when making connections between the outdoor unit (OC) and the Branch Box, as well for all OC-OC wiring intervals.
b. Use feed wiring to connect terminals M1 and M2 and the ground terminal on the transmission cable terminal block (TB3) of each outdoor unit (OC) to terminals M1 and M2 on the terminal S on the transmission cable terminal block (TB5) of the Branch Box.
c. Connect terminals 1 and 2 on the transmission cable terminal block (TB5/TB15) of the A-control indoor unit (A-IC), to the terminal block on the MA remote controller (MA-RC).
d. Connect together terminals M1, M2 and terminal S on the terminal block for centralized control (TB7) for the outdoor unit (OC).
e. DO NOT change the jumper connector CN41 on outdoor multi controller circuit board.
f. The earth processing of S terminal for the centralized control terminal block (TB7) is unnecessary. Connect the terminal S on the power supply unit to the earth.
g. Set the address setting switch as follows.

Unit	Range	Setting Method
A-IC	01 to 50	According to the set address of connected Branch Box, set the A-IC addresses sequentially by SW1 on Branch Box. (For example, when setting the Branch Box address to 01, A-IC addresses set 02,03,04, and 05.)
Branch Box	01 to 50	Use a number within the range 1–50, but it should not make the highest address of connected A-IC exceed 50.
Outdoor Unit	51 to 100	Use the smallest address of all the Branch Box plus 50. The address automatically becomes “100” if it is set as “01–50”.
MA Remote Controller	–	Address setting is not necessary.

• **Name, Symbol, and the Maximum Units for Connection**

Permissible Length	Maximum line length via outdoor unit (M-NET cable): $L_1+L_2+L_3+L_4+L_5 \leq$ 1640 ft [500 m] (AWG16 [1.25mm^2] or more) Branch box/outdoor transmission line Maximum length (M-NET cable): L_1+L_2, L_3+L_4, $L_5 \leq$ 656 ft [200 m] (AWG16 [1.25 mm^2] or more) Indoor/branch box transmission line Maximum length (A-Control cable): $L_6 \leq$ 82 ft [25 m] (AWG14 [1.5] mm^2) Remote controller cable length: $m_1 \leq$ 656 ft [200 m] (AWG22 to AWG16 [0.3 to 1.25 mm^2])
Constraint items	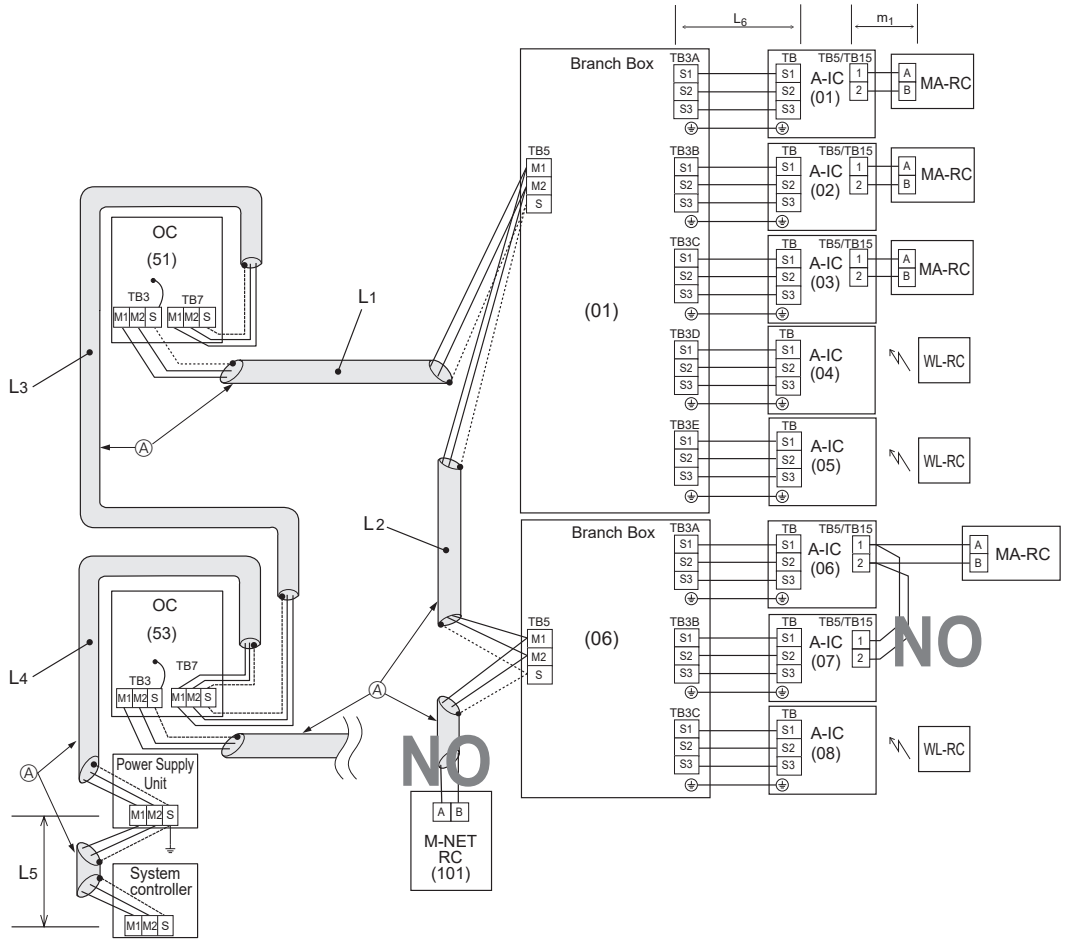 Ⓐ: Shielded wire ( ): Address example • Plural indoor units cannot be operated by an MA single remote controller. • Different refrigerant systems cannot be connected together. • M-NET Remote controller cannot be connected to this system.

8 TROUBLESHOOTING

8-1. CHECKPOINTS FOR TEST RUN

8-1-1. Procedures before test run

(1) Before a test run, make sure that the following work is completed.

- Installation related:
  Make sure that the panel of cassette type and electrical wiring are done.
  Otherwise electrical functions like auto vane will not operate normally.
- Piping related:
  Perform leakage test of refrigerant and drain piping.
  Make sure that all joints are perfectly insulated.
  Check stop valves on both liquid and gas side for full open.
- Electrical wiring related:
  Check ground wire, transmission cable, remote controller cable, and power supply cable for secure connection.
  Make sure that all switch settings of address or adjustments for special specification systems are correctly settled.

(2) Safety check:
With the insulation tester of 500 V, inspect the insulation resistance.
Do not touch the transmission cable and remote controller cable with the tester.
The resistance should be over 1.0 MΩ. Do not proceed inspection if the resistance is less than 1.0 MΩ.
Inspect between the outdoor unit power supply terminal block and ground first, metallic parts like refrigerant pipes or the electrical box next, then inspect all electrical wiring of outdoor unit, indoor unit, and all linked equipment.

(3) Before operation:
a) Turn the power supply switch of the outdoor unit to on for compressor protection. For a test run, wait at least 12 hours from this point.
b) Register control systems into remote controller(s). Never touch the ON/OFF switch of the remote controller(s). Refer to “7-2. Special Function Operation and Settings for M-NET Remote Controller” as for settings. In MA remote controller(s), this registration is unnecessary.

(4) More than 12 hours later from power supply to the outdoor unit, turn all power switch to on for the test run. Perform test run according to the “Operation procedure” table of the bottom of this page. While test running, make test run reports.

8-1-1-1. Test run for M-NET Remote controller

Refer to "12-4. TEST RUN" for operation procedure.

8-1-2. Countermeasures For Error During Test Run

If a problem occurs during test run, a code number will appear on the remote controller (or LED on the outdoor unit), and the air conditioning system will automatically cease operating.
Determine the nature of the abnormality and apply corrective measures.

Check code (2 digits)	Check code (4 digits)	Trouble	Detected Unit			Remarks
			Indoor	Outdoor	Remote Controller	
Ed	0403	Serial communication error or Model selection SW error		○		Outdoor unit Multi controller board–Power board communication trouble
U2	1102	Compressor temperature trouble		○		Check delay code 1202
UE	1302	High pressure trouble or thermal protector trouble		○		Check delay code 1402
U7	1500	Superheat due to low discharge temperature trouble		○		Check delay code 1600
U2	1501	Refrigerant shortage trouble		○		Check delay code 1601
		Closed valve in cooling mode		○		Check delay code 1501
P6	1503	Freeze protection of Branch box or Indoor unit	○			
EF	1508	4-way valve trouble in heating mode		○		Check delay code 1608
L6	2135	Circulation water freeze protection	○			
PA	2500	Water leakage	○			
P5	2502	Drain overflow protection	○			
P4	2503	Drain sensor abnormality	○			
-	3121	Out-of-range outside air temperature		○		
UF	4100	Compressor current interruption (Locked compressor)		○		Check delay code 4350
Pb	4114	Fan trouble (Indoor)	○			
UP	4210	Compressor overcurrent interruption/failure in 12 VDC power supply circuit on power circuit board		○		
U9	4220	Voltage shortage/overvoltage/PAM error/L1open phase/power synchronization signal error		○		Check delay code 4320
U5	4230	Heat sink temperature trouble		○		Check delay code 4330
U6	4250	Power module trouble or overcurrent trouble		○		Check delay code 4350
U8	4400	Fan trouble (Outdoor)		○		Check delay code 4500
U3	5101	Air inlet thermistor (TH21) open/short	○			
		Compressor temperature thermistor (TH4) open/short		○		Check delay code 1202
U4	5102	Liquid pipe temperature thermistor (TH22) open/short	○			
		Suction pipe temperature thermistor (TH6) open/short		○		Check delay code 1211
U4	5103	Gas pipe temperature thermistor (TH23) open/short	○			
U4	5105	Outdoor liquid pipe temperature thermistor (TH3) open/short		○		Check delay code 1205
U4	5106	Ambient temperature thermistor (TH7) open/short		○		Check delay code 1221
U4	5109	HIC pipe temperature thermistor (TH2) open/short		○		Check delay code 1222
U4	5110	Heat sink temperature thermistor (TH8) open/short		○		Check delay code 1214
F5	5201	High pressure sensor (63HS) trouble		○		Check delay code 1402
F3	5202	Low pressure sensor (63LS) trouble		○		Check delay code 1400
UH	5300	Primary current error		○		Check delay code 4310
P4	5701	Contact failure of drain float switch	○			
A0	6600	Duplex address error	○	○	○	Only M-NET Remote controller is detected.
A2	6602	Transmission processor hardware error	○	○	○	Only M-NET Remote controller is detected.
A3	6603	Transmission bus BUSY error	○	○	○	Only M-NET Remote controller is detected.
A6	6606	Signal communication error with transmission processor	○	○	○	Only M-NET Remote controller is detected.
A7	6607	No ACK error	○		○	Only M-NET Remote controller is detected.
A8	6608	No response frame error	○		○	Only M-NET Remote controller is detected.
E0/E4	6831	MA communication receive error	○		○	Only MA Remote controller is detected.
E3/E5	6832	MA communication send error	○		○	Only MA Remote controller is detected.
E3/E5	6833	MA communication send error	○		○	Only MA Remote controller is detected.
E0/E4	6834	MA communication receive error	○		○	Only MA Remote controller is detected.
EF	7100	Total capacity error		○		
EF	7101	Capacity code error	○	○		
EF	7102	Connecting excessive number of units and branch boxes		○		
EF	7105	Address setting error		○		
EF	7130	Incompatible unit combination error		○		

NOTES:

1. When the outdoor unit detects No ACK error/No response error, an object indoor unit is treated as a stop, and not assumed to be abnormal.
2. The check codes displayed on the units may be different between the error source and others. In that case, please refer to the check code of error source by displayed attribute and address.
3. Refer to the service manual of indoor unit or remote controller for the detail of error detected in indoor unit or remote controller.

- Self-diagnosis function
  The indoor and outdoor units can be diagnosed automatically using the self-diagnosis switch (SW1) and LED indication (LED1, LED2) found on the outdoor multi controller circuit board.
  LED indication : Set all contacts of SW1 to OFF.
- During normal operation
  The LED indicates the drive state of outdoor unit.

Bit	1	2	3	4	5	6	7	8
Indication	Compressor operated	52C	21S4	SV1	(SV2)	—	—	Always lit

[Example]
When the compressor and SV1 are on during cooling operation.

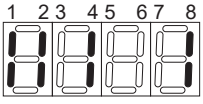

8-1-3. SELF-DIAGNOSIS ACTION BY FLOWCHART

Check code	
0403 (Ed)	Serial communication error or Model selection SW error

Abnormal points and detection methods	Causes and checkpoints
If serial communication between the outdoor multi controller circuit board and outdoor power circuit board is defective.	①Wire breakage or contact failure of connector CN2 or CN4 ②Malfunction of communication circuit to power circuit board on outdoor multi controller circuit board ③Malfunction of communication circuit on outdoor power circuit board

●Diagnosis of defects

Make sure to turn the power OFF before connecting/disconnecting any connectors, or replacing boards.

Diagnosis	Remedy

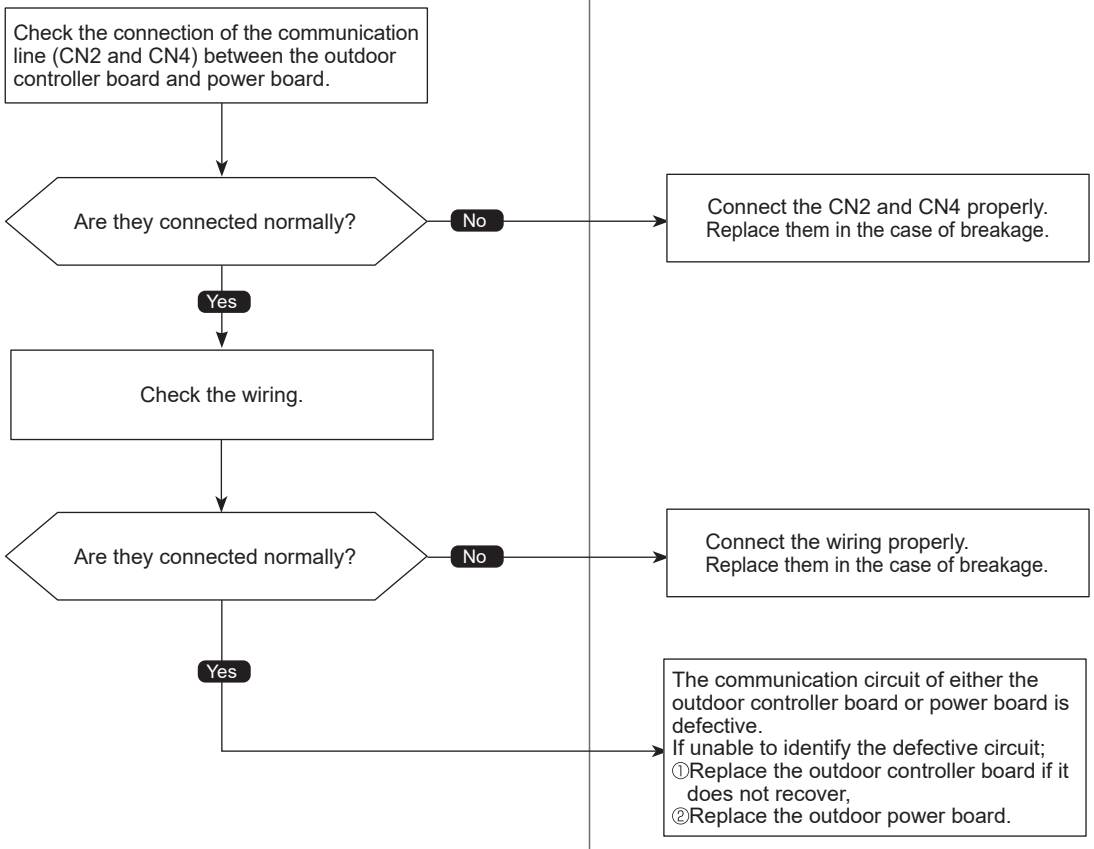

Check code

1102
(U2)

Compressor temperature trouble

Chart 1 of 2

Abnormal points and detection methods	Causes and checkpoints
(1) If the TH4 temperature becomes conditions as follows: ●exceeds 230°F [110℃] continuously for 5 minutes ●exceeds 257°F[125℃] (2) If a pressure detected by the high pressure sensor and converted to saturation temperature exceeds 104°F [40℃] during defrosting, and TH4 exceeds 230°F [110℃]. TH4: Thermistor <Compressor> LEV: Linear expansion valve	①Malfunction of stop valve ②Over-heated compressor operation caused by shortage of refrigerant ③Defective thermistor ④Defective outdoor controller board ⑤LEV performance failure ⑥Defective indoor controller board ⑦Clogged refrigerant system caused by foreign object ⑧Refrigerant shortage while in heating operation (Refrigerant liquid accumulation in compressor while indoor unit is OFF/thermo-OFF.)

●Diagnosis of defects

Make sure to turn the power OFF before connecting/disconnecting any connectors, or replacing boards.

Diagnosis	Remedy

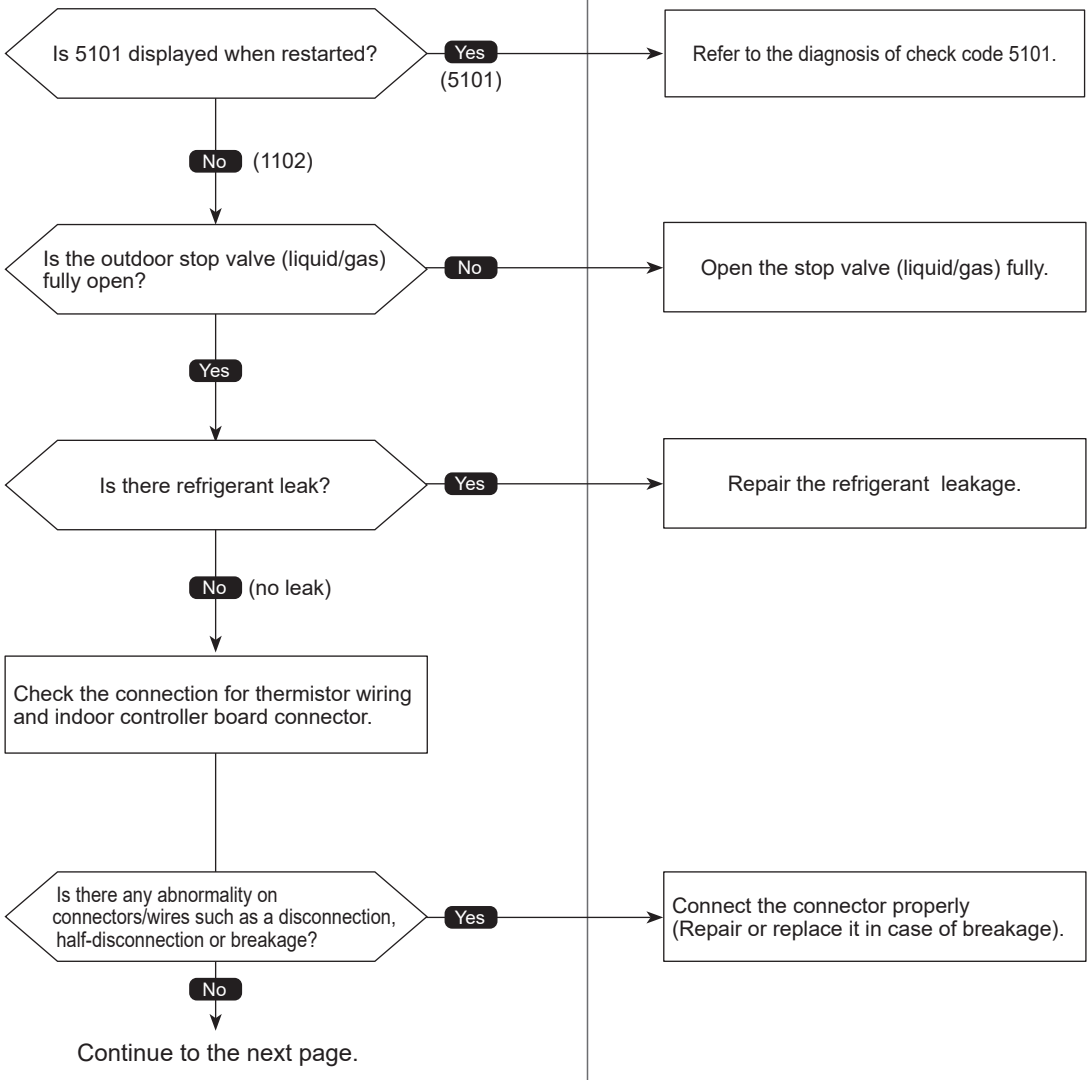

Check code

1102
(U2)

Compressor temperature trouble

●Diagnosis of defects

Make sure to turn the power OFF before connecting/disconnecting any connectors, or replacing boards.

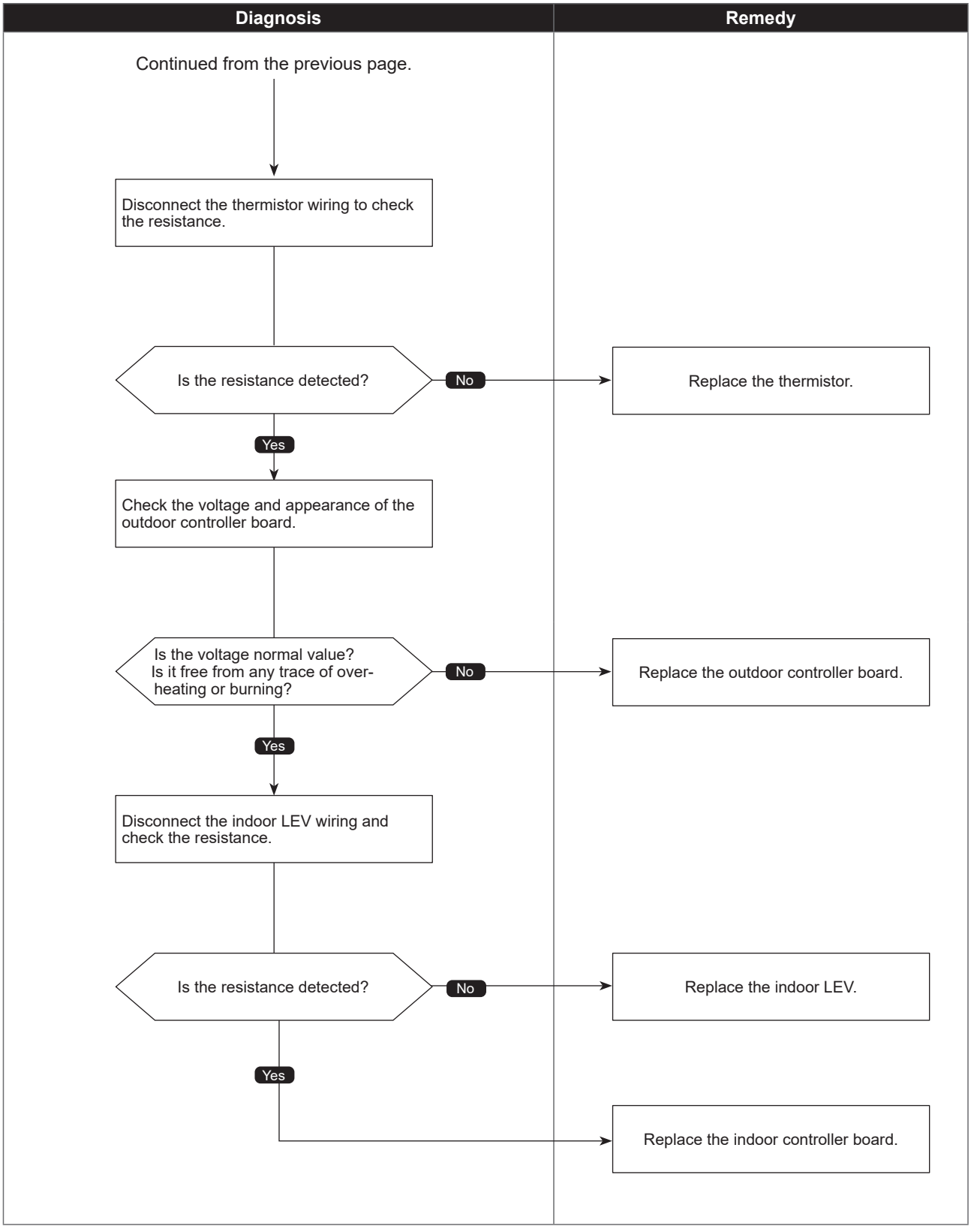

Check code

1302 (UE)

High pressure trouble or thermal protector trouble

Abnormal points and detection methods	Causes and checkpoints
(1) High pressure abnormality (63H operation) If 63H operates(*) during compressor operation. (*602 PSIG [4.15 MPaG]) (2) High pressure abnormality (63HS detected) 1. If a pressure detected by 63HS is 625 PSIG [4.31 MPaG]or more during compressor operation. 2. If a pressure detected by 63HS is 600 PSIG [4.14 MpaG] or more for 3 minutes during compressor operation. (3) Compressor temperature abnormality (TRS operation) If TRS operates(*) during compressor operation. (*266˚F[130˚C]) 63H : High pressure switch 63HS: High pressure sensor LEV : Linear expansion valve SV1 : Solenoid valve TH4 : Thermistor <Compressor> TH7 : Thermistor <Ambient> TRS : Thermal protector	① Defective operation of stop valve (not fully open) ② Clogged or broken pipe ③ Malfunction or locked outdoor fan motor ④ Short-cycle of outdoor unit ⑤ Dirt of outdoor heat exchanger ⑥ Remote controller transmitting error caused by noise interference ⑦ Contact failure of the outdoor controller board connector ⑧ Defective outdoor controller board ⑨ Short-cycle of indoor unit ⑩ Decreased airflow, clogged filter, or dirt on indoor unit. ⑪ Malfunction or locked indoor fan motor ⑫ Decreased airflow caused by defective inspection of outdoor temperature thermistor (It detects lower temperature than actual temperature.) ⑬ Indoor LEV performance failure ⑭ Malfunction of fan driving circuit ⑮ SV1 performance failure ⑯ Defective high pressure sensor ⑰ Defective high pressure sensor input circuit on outdoor controller board ⑱ Defective Thermistor<Compressor> ⑲ Over-heated compressor operation caused by shortage of refrigerant

●Diagnosis of defects

Make sure to turn the power OFF before connecting/disconnecting any connectors, or replacing boards.

Diagnosis	Remedy
Turn the power OFF of indoor/outdoor unit, Fresh Master, Lossnay and remote controller simultaneously for 10 minutes, then turn the power back ON. Is the check code <6607> No ACK error displayed? — Yes	There is abnormality in circuit board or wiring connection on the outdoor unit.
No → Is 5201 displayed when restarted? — Yes (5201)	Refer to the diagnosis of check code 5201.
No (1302) → Is the outdoor stop valve (liquid/gas) fully open? — No	Open the stop valve (liquid/gas) fully.
Yes → Does the outdoor fan rotate while the operation? — No	Check the outdoor fan motor. Refer to "HOW TO CHECK PARTS" on the outdoor unit service manual.
Yes → Does the indoor fan rotate while the operation? — No	Check the indoor fan motor. Refer to "HOW TO CHECK PARTS" on the indoor unit service manual.
Yes → Is the indoor unit short-cycled? — Yes (short-cycled)	Solve the short-cycle.
No (no short-cycle) → Continue to the next page.	

Check code

1302 (UE)

High pressure trouble or thermal protector trouble

●Diagnosis of defects

Make sure to turn the power OFF before connecting/disconnecting any connectors, or replacing boards.

Diagnosis	Remedy
Continued from the previous page.	
Is the indoor unit filter clogged?	
Yes (Clogged filter)	Clean the filter.
No (No clog)	
Is there dirt on the indoor heat exchanger?	
Yes (dirty)	Wash the indoor heat exchanger.
No (no dirt)	
Is the outdoor unit short-cycled?	
Yes (short-cycled)	Solve the short cycle.
No (no short-cycle)	
Is there dirt on the outdoor heat exchanger?	
Yes (dirty)	Wash the outdoor heat exchanger.
No (no dirt)	
Are the pipes clogged or broken?	
Yes	Correct defective pipes.
No	
Disconnect the TH7 wiring and check the resistance.	
Continue to the next page.	

Check code

1302 (UE)

High pressure trouble or thermal protector trouble

●Diagnosis of defects

Make sure to turn the power OFF before connecting/disconnecting any connectors, or replacing boards.

Diagnosis	Remedy
Continued from the previous page.	
Is the resistance detected?	
No	Replace the TH7.
Yes	
Disconnect the indoor LEV wiring to check the resistance.	
Is the resistance detected?	
No	Replace the indoor LEV.
Yes	
Check the voltage(*) and appearance of the indoor controller board.	
*For the voltage, refer to "8-8.HOW TO CHECK COMPONENTS".	
Is the voltage normal? Is it free from any trace of over-heating or burning?	
No	Replace the indoor controller board.
Yes	
Check the resistance of SV1.	
Continue to the next page.	

Check code

1302 (UE)

High pressure trouble or thermal protector trouble

●Diagnosis of defects

Make sure to turn the power OFF before connecting/disconnecting any connectors, or replacing boards.

Diagnosis	Remedy
Continued from the previous page.	
Is the resistance detected?	
No	Replace the SV1.
Yes	
Is the connector for outdoor controller board 63H disconnected or loose?	
Yes	Reconnect the connector or connect it tightly.
No	
Check the 63HS voltage.	
Is the voltage(*) detected?	
No	Replace the 63HS.
Yes	
Disconnect the TH4 wiring and check the resistance	
Is the resistance detected?	
No	Replace the TH4.
Yes	
Is there refrigerant leak?	
Yes	Repair the refrigerant leakage.
No	
	Replace the outdoor controller board.

*For the voltage, refer to "8-8.HOW TO CHECK COMPONENTS".

Check code

1500 (U7)

Superheat due to low discharge temperature trouble

Chart 1 of 2

Abnormal points and detection methods	Causes and checkpoints
If the discharge superheat is continuously detected −27°F [−15℃](*) or less for 5 minutes even though the indoor LEV has minimum open pulse after the compressor starts operating for 10 minutes. LEV : Linear expansion valve TH4 : Thermistor <Compressor> 63HS : High pressure sensor *At this temperature, conditions for the abnormality detection will not be satisfied if no abnormality is detected on either TH4 or 63HS.	① Disconnection or loose connection of TH4 ② Defective holder of TH4 ③ Disconnection of LEV coil ④ Disconnection of LEV connector ⑤ LEV performance failure

●Diagnosis of defects

Make sure to turn the power OFF before connecting/disconnecting any connectors, or replacing boards.

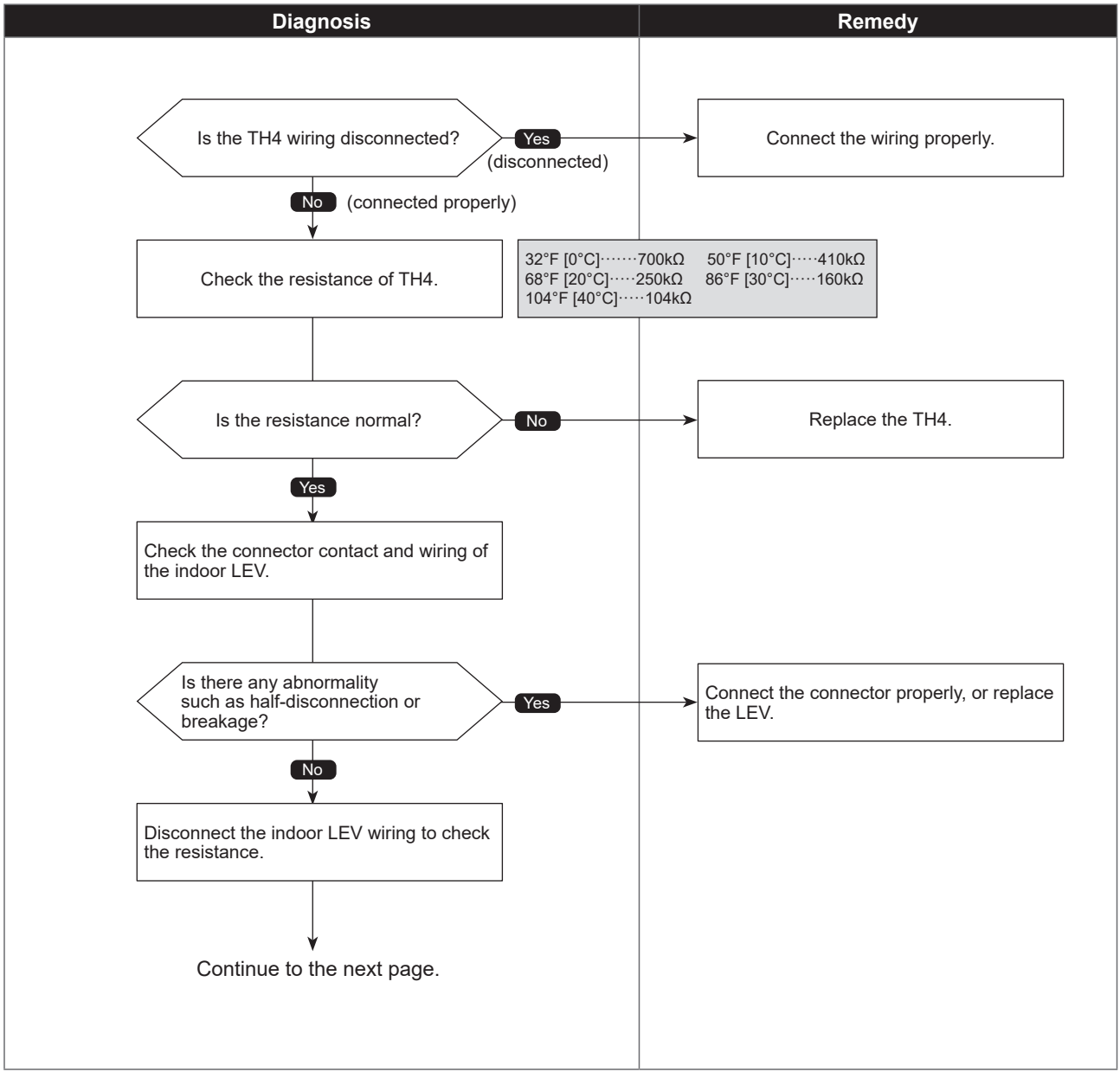

Check code

1500 (U7)

Superheat due to low discharge temperature trouble

●Diagnosis of defects

Make sure to turn the power OFF before connecting/disconnecting any connectors, or replacing boards.

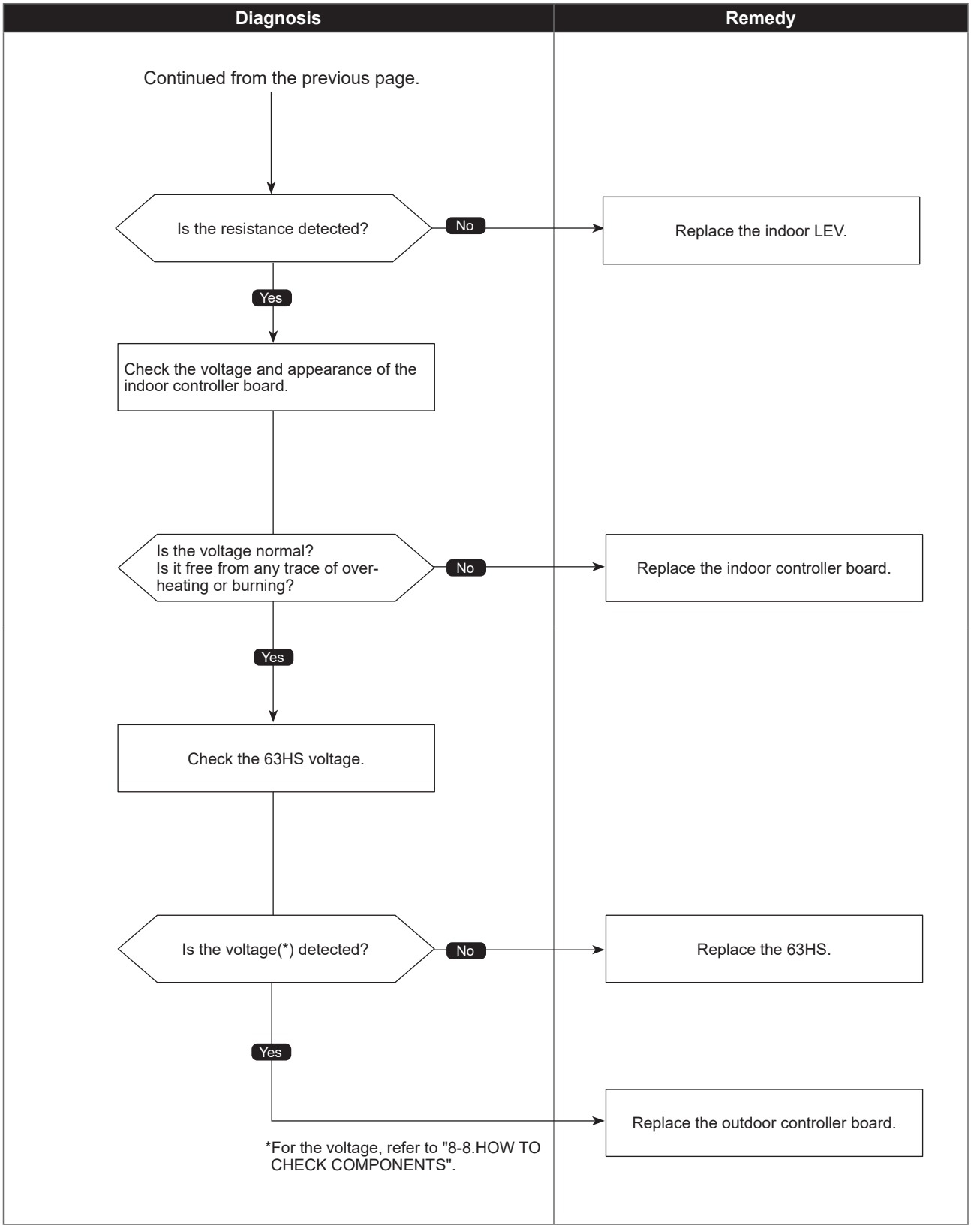

Check code

1501 (U2)

Refrigerant shortage trouble

Abnormal points and detection methods	Causes and checkpoints
(1) When all of the following conditions have been satisfied for 15 consecutive minutes: 1. The compressor is operating in HEAT mode. 2. Discharge super heat is 176°F [80℃] or more. 3. Difference between TH7 and the TH3 applies to the formula of (TH7−TH3 < 9°F [5℃]). 4.The saturation temperature converted from a high pressure sensor detects below 95°F [35℃].	①Defective operation of stop valve (not fully open) ②Defective thermistor ③Defective outdoor controller board ④Indoor LEV performance failure ⑤Gas leakage or shortage ⑥Defective 63HS
(2) When all of the following conditions have been satisfied: 1.The compressor is in operation. 2.When cooling, discharge superheat is 144°F [80℃] or more, and the saturation temperature converted from a high pressure sensor is over −40°F [−40℃]. When heating, discharge superheat is 162°F [90℃] or more.	TH3 : Thermistor <Outdoor liquid pipe> TH7 : Thermistor <Ambient> LEV : Linear expansion valve 63HS : High pressure sensor

●Diagnosis of defects

Make sure to turn the power OFF before connecting/disconnecting any connectors, or replacing boards.

Diagnosis	Remedy
Is the outdoor stop valve (ball valve) fully open? — No	Open the stop valve (ball valve) fully.
Yes	
Is there refrigerant leak? — Yes (leaking)	Repair the refrigerant leak.
No (no leaking)	
Is 5104 displayed when restarted? — Yes (5104)	Refer to the diagnosis of check code 5104.
No (1501)	
Check relevant thermistor wirings and connector contacts of the controller boards.	
Is there any abnormality on connectors such as disconnection, half-disconnection or breakage? — Yes	Connect the connector properly (Repair or replace it in the case of breakage).
No	
Disconnect the thermistor wiring and check the resistance.	
Continue to the next page.	

Check code

1501 (U2)

Refrigerant shortage trouble

●Diagnosis of defects

Make sure to turn the power OFF before connecting/disconnecting any connectors, or replacing boards.

Diagnosis	Remedy
Continued from the previous page.	
Is the resistance detected?	
No	Replace the thermistor.
Yes	
Check the 63HS voltage.	
Is the voltage detected?	
No	Replace the 63HS.
Yes	
Check the voltage and appearance of the outdoor controller board.	
Yes	
Is the voltage normal value? Is it free from any trace of over-heating or burning?	
No	Replace the outdoor controller board.
Yes	
Disconnect the indoor LEV wiring and check the resistance.	
Is the resistance detected?	
No	Replace the indoor LEV.
Yes	Replace the indoor controller board.

Check code

1501 (U2)

Closed valve in cooling mode

Abnormal points and detection methods	Causes and checkpoints
If stop valve is closed during cooling operation. When both of the following temperature conditions have been satisfied for 20 minutes or more during cooling operation. 1. TH22j − TH21j ≧ −3.6°F [−2°C] 2. TH23j − TH21j ≧ −3.6°F [−2°C] Note: For indoor unit, the abnormality is detected if an operating unit satisfies the condition.	① Outdoor liquid/gas valve is closed. ② Mulfunction of outdoor LEV (LEV-A) (blockage) TH21: Indoor intake temperature thermistor TH22: Indoor liquid pipe temperature thermistor TH23: Indoor gas pipe temperature thermistor LEV: Linear expansion valve

●Diagnosis of defects

Make sure to turn the power OFF before connecting/disconnecting any connectors, or replacing boards.

Diagnosis	Remedy

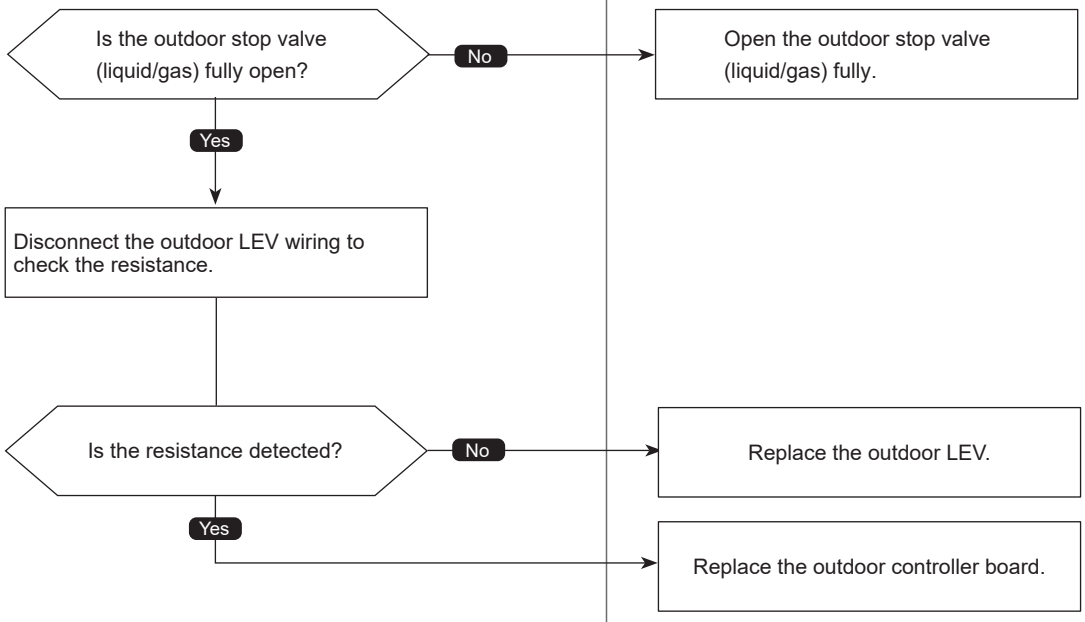

Check code

1503 (P6)

Freeze protection of Branch box or Indoor unit

Abnormal points and detection methods	Causes and checkpoints
The purpose of the check code is to prevent indoor unit from freezing or dew condensation which is caused when a refrigerant keeps flowing into the unit in STOP. When all of the following conditions are satisfied: 1. The compressor is operating in COOL mode. 2. 15 minutes have passed after the startup of the compressor, or the change in the number of operating indoor units is made (including a change by turning thermo-ON/OFF). 3. After the condition 2 above is satisfied, the thermistor of indoor unit in STOP detects TH22j ≦ 23°F [−5°C] for 5 consecutive minutes.	①Wrong piping connection between indoor unit and branch box ②Miswiring between indoor unit and branch box ③Miswiring of LEV in branch box ④Malfunction of LEV in branch box LEV: Linear expansion valve

●Diagnosis of defects

Make sure to turn the power OFF before connecting/disconnecting any connectors, or replacing boards.

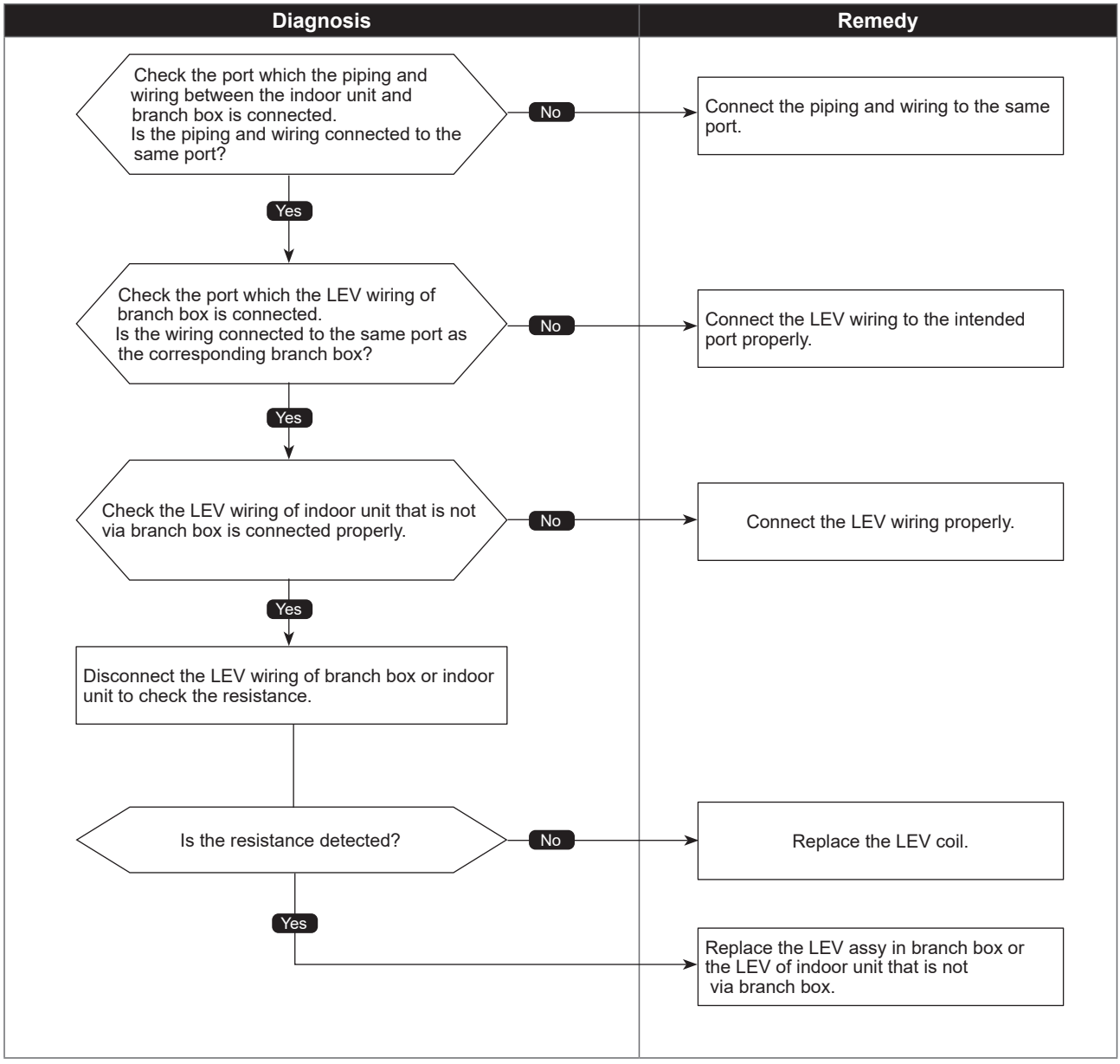

Check code

1508 (EF)

4-way valve trouble in heating mode

Abnormal points and detection methods	Causes and checkpoints
If 4-way valve does not operate during heating operation. When any of the following temperature conditions is satisfied for 3 minutes or more during heating operation when the outdoor temperature is −4°F [−20°C] or more: 1. TH22j − TH21j ≦ −18°F [−10°C] 2. TH23j − TH21j ≦ −18°F [−10°C] 3. TH22j ≦ 37.4°F [3°C] 4. TH23j ≦ 37.4°F [3°C] Note: For indoor unit, the abnormality is detected if an operating unit satisfies the condition.	①4-way valve failure ②Disconnection or failure of 4-way valve coil ③Clogged drain pipe ④Disconnection or loose connection of connectors ⑤Malfunction of input circuit on outdoor multi controller circuit board ⑥Defective outdoor power circuit board TH21: Indoor intake temperature thermistor (RT11 or TH1) TH22: Indoor liquid pipe temperature thermistor (RT13 or TH2) TH23: Indoor gas pipe temperature thermistor (TH-A to E)

●Diagnosis of defects

Make sure to turn the power OFF before connecting/disconnecting any connectors, or replacing boards.

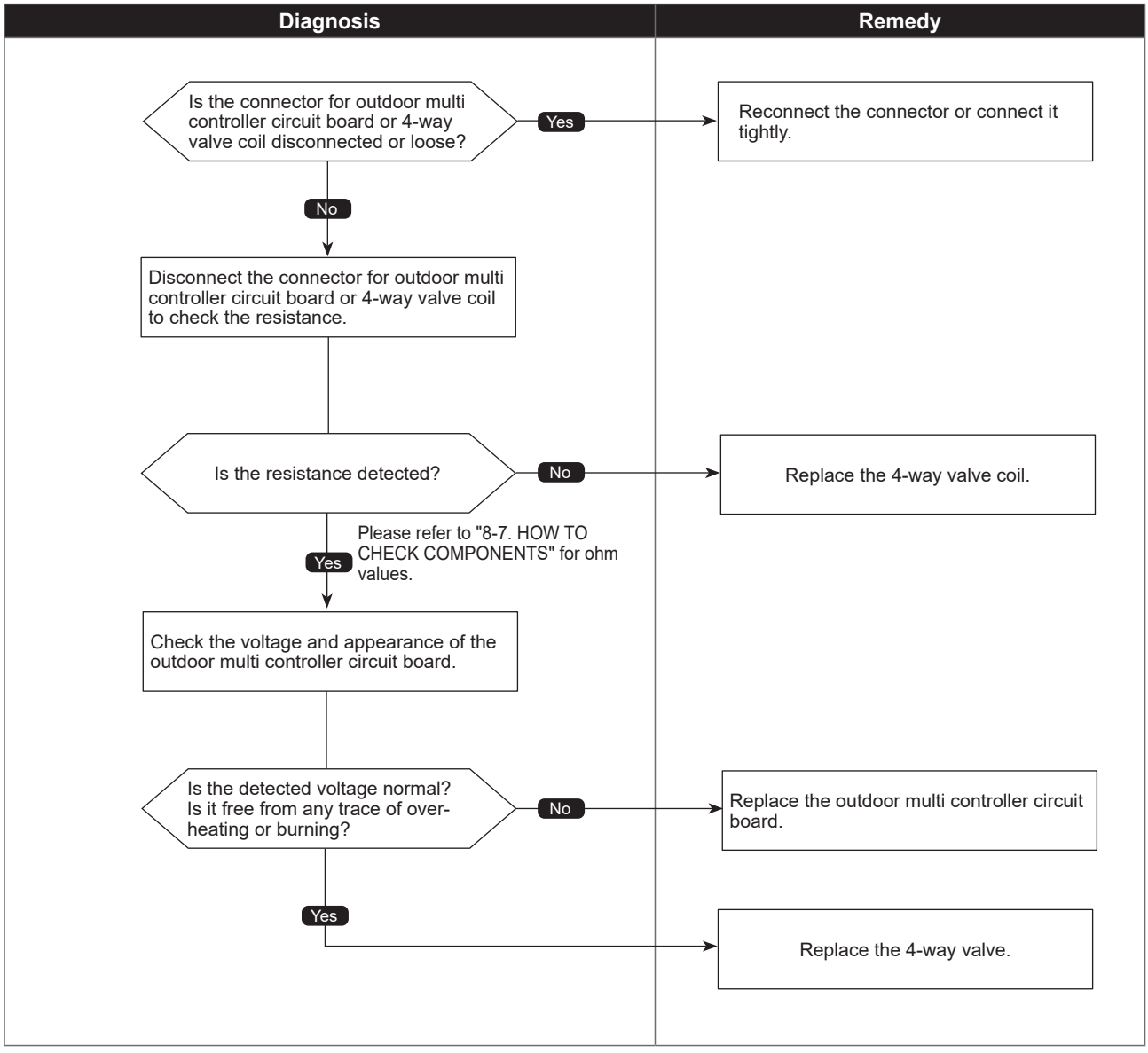

Check code

3121

Out-of-range outside air temperature

Abnormal points and detection methods	Causes and checkpoints
① When the thermistor temperature of -24°F[-31.1°C] or below has continuously been detected for 3 minutes during heating operation (during compressor operation), the unit makes an error stop and "3121" appears on the LED1 and LED2. ② The compressor restarts when the thermistor temperature is -14°F [-25.6°C] or above. ③ If the unit is turned OFF, the outdoor temperature error will be canceled.	①Outdoor air temperature ②Thermistor failure ③Wire failure ④Defective outdoor controller board

●Diagnosis of defects

Make sure to turn the power OFF before connecting/disconnecting any connectors, or replacing boards.

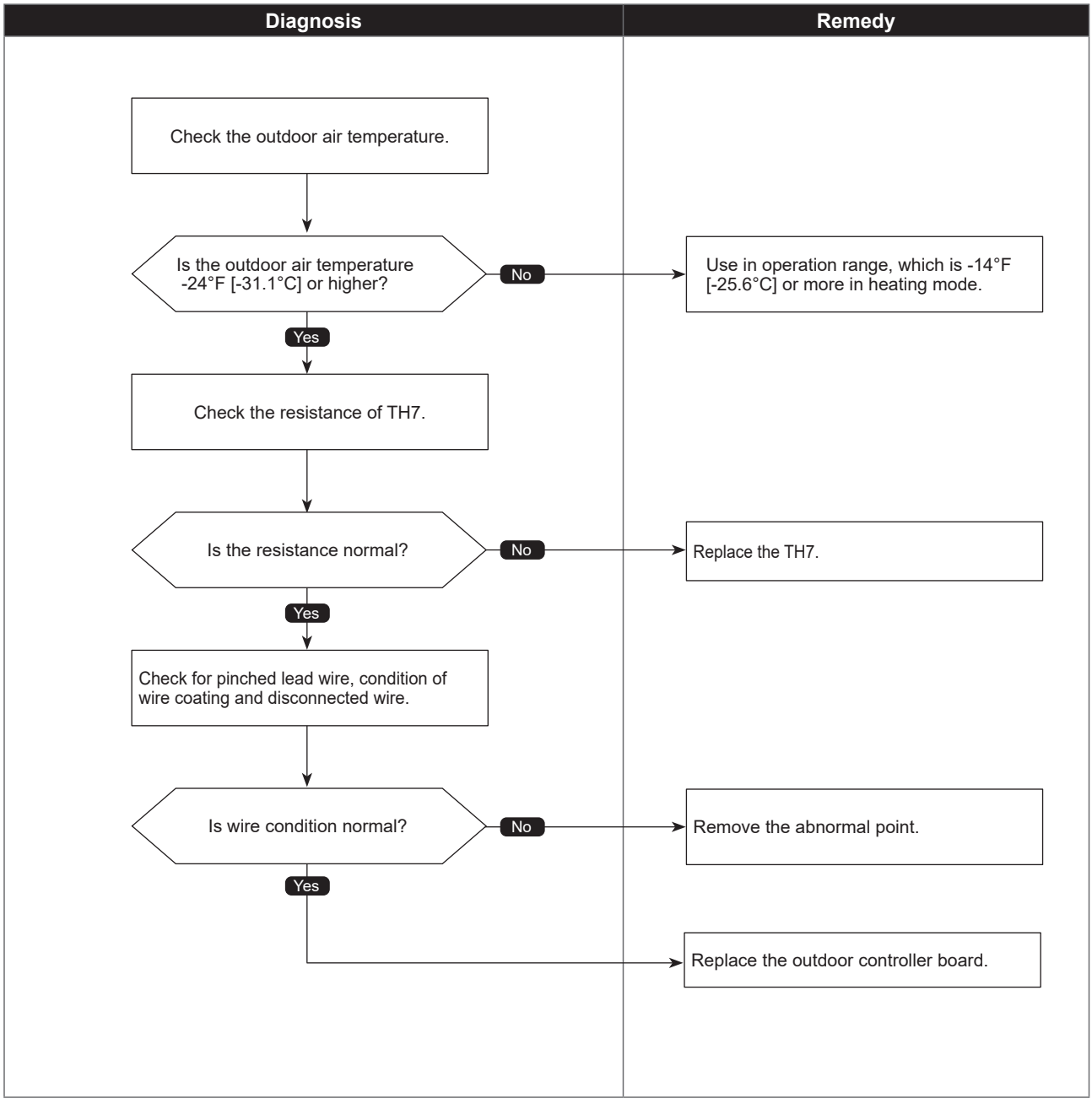

Check code

4100 (UF)

Compressor current interruption (Locked compressor)

Abnormal points and detection methods	Causes and checkpoints
If overcurrent of DC bus or compressor is detected before 30 seconds after the compressor starts operating.	①Closed stop valve ②Decrease of power supply voltage ③Looseness, disconnection, or wrong phase of compressor wiring connection ④Incorrect DIP-SW setting of model selection on the outdoor controller board ⑤Defective compressor ⑥Defective outdoor power circuit board

●Diagnosis of defects

Make sure to turn the power OFF before connecting/disconnecting any connectors, or replacing boards.

Diagnosis	Remedy
Check the stop valve.	
Is the stop valve (liquid/gas) fully open? — No	Open the stop valve (liquid/gas) fully.
Yes	
Check the power supply voltage.	
Is the power supply voltage normal? — No	Ensure power supply from the facility. (Check for power supply open phase.)
Yes	
Check if the model selection switch is set correctly on the outdoor multi controller circuit board.	
Are they set properly? — No	Set the model selection switch correctly, then restart.
Yes	
Turn the power OFF to check for looseness, disconnection, or wrong phase of compressor wiring connection.	
Continue to the next page.	

Check code

4100 (UF)

Compressor current interruption (Locked compressor)

●Diagnosis of defects

Make sure to turn the power OFF before connecting/disconnecting any connectors, or replacing boards.

Diagnosis	Remedy
Continued from the previous page.	
Are they connected properly?	
No →	Connect the wiring properly, then turn the power back ON.
Yes ↓	
Check whether the compressor is faultily grounded or not.	
Is the compressor faultily grounded?	
No →	Replace the outdoor power circuit board (Defective outdoor power circuit board).
Yes ↓	
→	Replace the compressor (Defective compressor).

Check code

4210 (UP)

Compressor overcurrent interruption/failure in 12 VDC power supply circuit on power circuit board

Chart 1 of 2

Abnormal points and detection methods	Causes and checkpoints
① If overcurrent of compressor is detected after 30 seconds since the compressor starts operating. ② If 12 VDC power is not supplied from the 12 VDC supply circuit on the power circuit board.	① Closed outdoor stop valve ② Decrease of power supply voltage ③ Looseness, disconnection or reverse phase of compressor wiring connection ④ Malfunction of indoor/outdoor fan ⑤ Short-cycle of indoor/outdoor unit ⑥ Model selection error upon replacement of outdoor multi controller circuit board ⑦ Malfunction of input circuit on outdoor multi controller circuit board ⑧ Defective compressor ⑨ Defective outdoor power circuit board

●Diagnosis of defects

Make sure to turn the power OFF before connecting/disconnecting any connectors, or replacing boards.

Diagnosis	Remedy

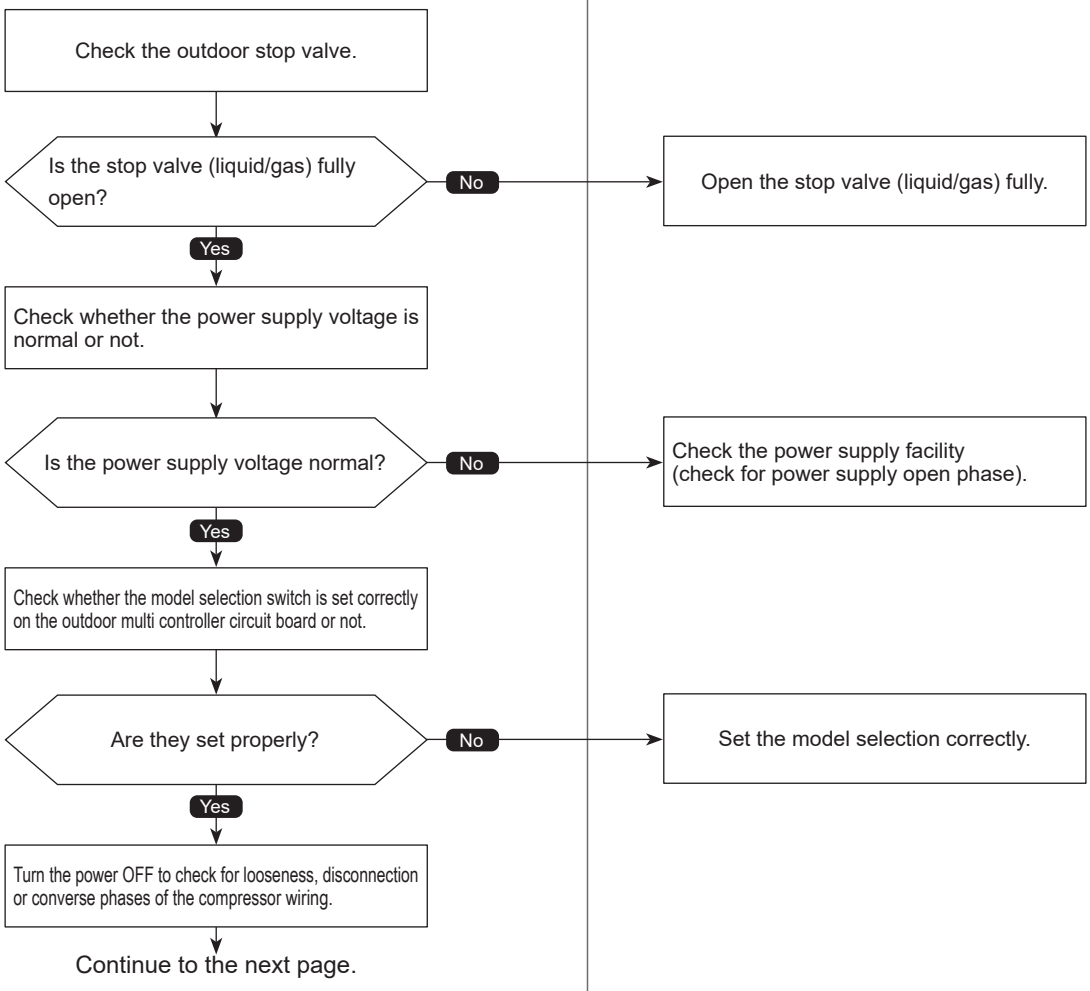

Check code

4210 (UP)

Compressor overcurrent interruption/failure in 12 VDC power supply circuit on power circuit board

●Diagnosis of defects

Make sure to turn the power OFF before connecting/disconnecting any connectors, or replacing boards.

Diagnosis	Remedy
Continued from the previous page.	
Are they connected properly?	
No →	Connect the compressor wiring (U, V and W phase) properly, then turn the power back ON.
Yes ↓	
Check the operation of indoor/outdoor fan motors.	
Does it operate normally?	
No →	Check the DC fan motor.
Yes ↓	
Check for indoor/outdoor short-cycle.	
Are those units short-cycled?	
Yes (short-cycled) →	Resolve the short-cycle.
No (no short-cycle) ↓	
Disconnect the compressor wiring from the outdoor power circuit board, then check the voltage among each phases U, V and W during test run (SW7-1 ON).	Make sure to perform a voltage check with the same performing frequencies.
Are the voltage among the phases U-V, V-W and W-U different?	
No →	Replace the compressor.
Yes ↓	
Replace the outdoor multi controller circuit board.	
Does it operate normally?	
No →	Replace the outdoor power circuit board.
Yes →	Complete.

Check code
4220 (U9)

Voltage shortage /Overvoltage/PAM error/L1 open phase/ Primary current sensor error/Power synchronization signal error

Abnormal points and detection methods	Causes and checkpoints
If any of following symptoms are detected; ●Decrease of DC bus voltage to 200 V (Single-phase), 350 V (3-phase) ●Increase of DC bus voltage to 400 V (Single-phase), 760 V (3-phase) ●DC bus voltage stays at 310 V or less for consecutive 30 seconds when the operational frequency is over 20 Hz. ●When any of following conditions is satisfied while the detections value of primary current is 0.1 A or less. 1. The operational frequency is 40 Hz or more. 2. The compressor current is 6 A or more.	① Decrease/increase of power supply voltage ② L1 open-phase (3-phase only) ③ Primary current sensor failure ④ Disconnection of compressor wiring ⑤ Malfunction of 52C relay ⑥ Defective outdoor power circuit board ⑦ Malfunction of 52C relay driving circuit on outdoor multi controller circuit board ⑧ Disconnection of CN5 (3-phase only) ⑨ Disconnection of CN2 ⑩ Malfunction of primary current detecting circuit on outdoor power circuit board ⑪ Malfunction of resistor connected to 52C relay on outdoor power circuit board (3-phase only)

●Diagnosis of defects
Make sure to turn the power OFF before connecting/disconnecting any connectors, or replacing boards.

Single phase: single phase model
3-phase: three phase for wire model

The black square (■) indicates a switch position.

Diagnosis / Remedy

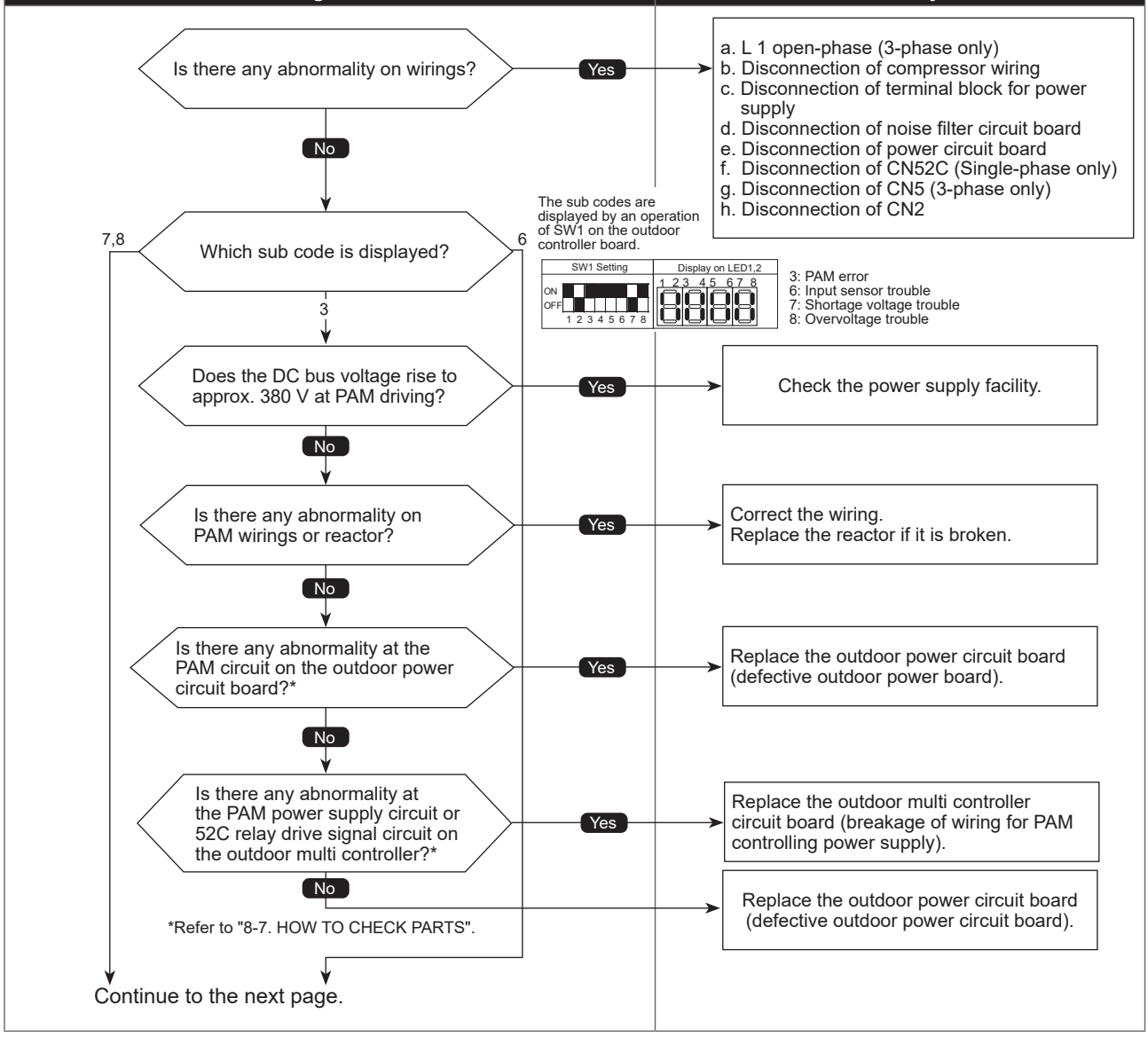

Voltage shortage/overvoltage/PAM error/L1 open phase/primary current sensor error/power synchronization signal error

●Diagnosis of defects

Make sure to turn the power OFF before connecting/disconnecting any connectors, or replacing boards.

The black square (■) indicates a switch position.

Diagnosis	Remedy

Continued from the previous page.

7, 8 | 6

Is the outdoor unit single-phase or 3-phase?

- Single-phase → Replace the outdoor power circuit board (Defective outdoor power circuit board).
- 3-phase ↓

Is CN5 connected properly without any contact failure?

- No → Correct the CN5 wiring.
- Yes ↓

Is there any breakage of ACCT on the noise filter circuit board?

- Yes → Replace the noise filter circuit board.
- No → Replace the outdoor power circuit board (Defective outdoor power circuit board).

Check the power supply voltage on the terminal block of the outdoor unit.

Is the power supply normal?

- No → Check the power supply facility.
- Yes ↓

Check the bus voltage read by the microprocessor with an operation of SW1 on the outdoor multi controller circuit board.

The bus voltage can be displayed by an operation of SW1 on the outdoor multi controller circuit board.

SW1 Setting	Display on LED1,2	Unit
ON / OFF 1 2 3 4 5 6 7 8	0–9999	V

Check the bus voltage at the test points below on the outdoor power circuit board using a multimeter.
Test points: CNDC 1-3 pin

Is the bus voltage normal?

- No → Check the resistor connected to 52C relay and reactor. Replace it if the resistor is broken. Replace the outdoor power circuit board if the resistor is not broken.
- Yes → Operate the unit and check if the problem occurs again.

Check code

4230
(U5)

Heat sink temperature trouble

Abnormal points and detection methods	Causes and checkpoints
If TH8 detects a temperature outside the specified range during compressor operation. TH8: Thermistor <Heat sink>	①Blocked outdoor fan ②Malfunction of outdoor fan motor ③Blocked airflow path ④Rise of ambient temperature ⑤Characteristic defect of thermistor ⑥Malfunction of input circuit on outdoor power board ⑦Malfunction of outdoor fan driving circuit

●Diagnosis of defects

Make sure to turn the power OFF before connecting/disconnecting any connectors, or replacing boards.

Diagnosis | **Remedy**

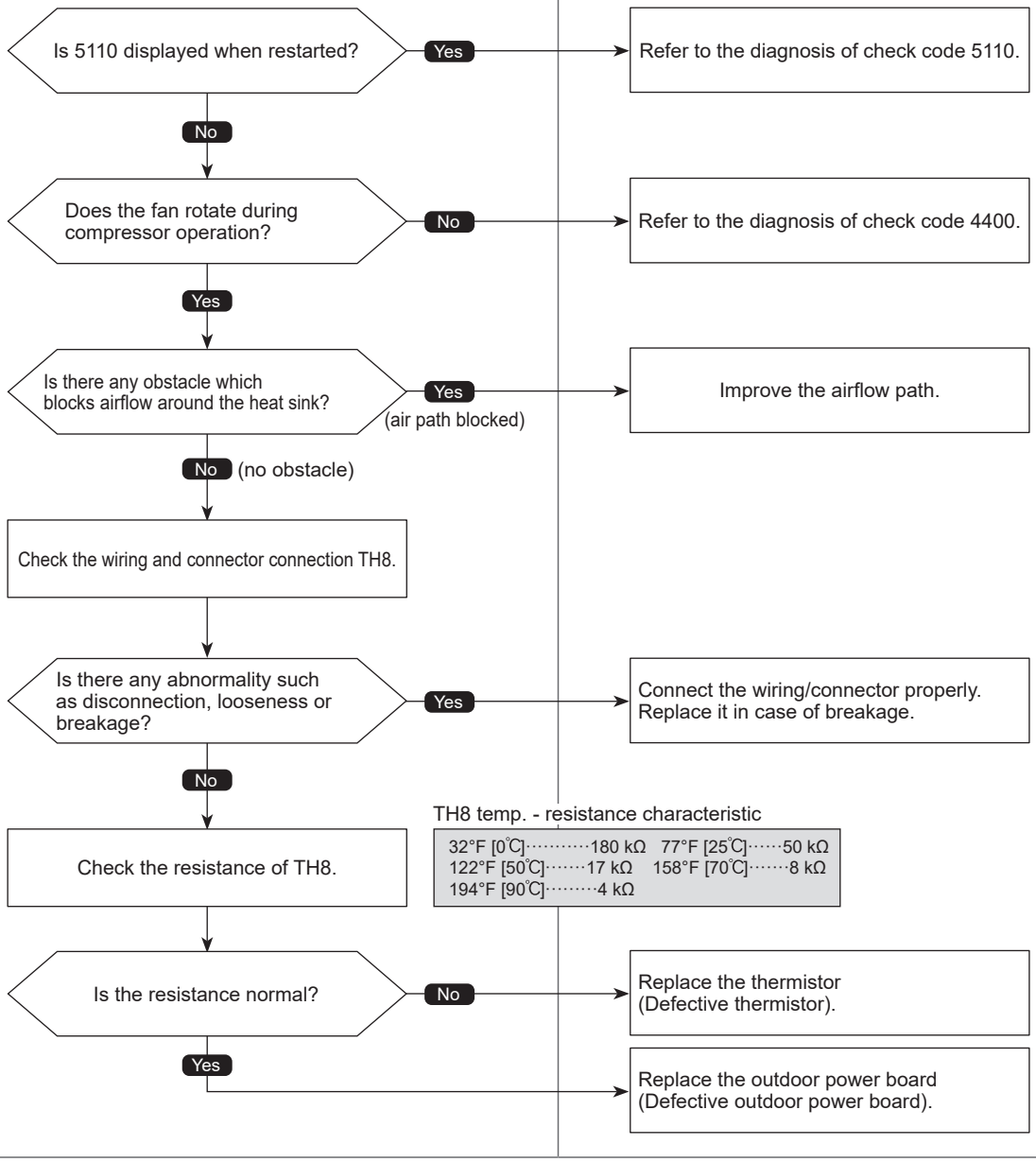

Check code

4250 (U6)

Power module trouble or overcurrent trouble

Abnormal points and detection methods	Causes and checkpoints
If overcurrent of DC bus or compressor is detected 30 seconds after the compressor starts operating. To determine the source of abnormality, either the compressor or the power module, drive the power module forcedly.	①Closed outdoor stop valve ②Decrease of power supply voltage ③Disconnection, looseness or conversed connection of compressor wiring ④Defective compressor ⑤Defective outdoor power circuit board

●Diagnosis of defects

Make sure to turn the power OFF before connecting/disconnecting any connectors, or replacing boards.

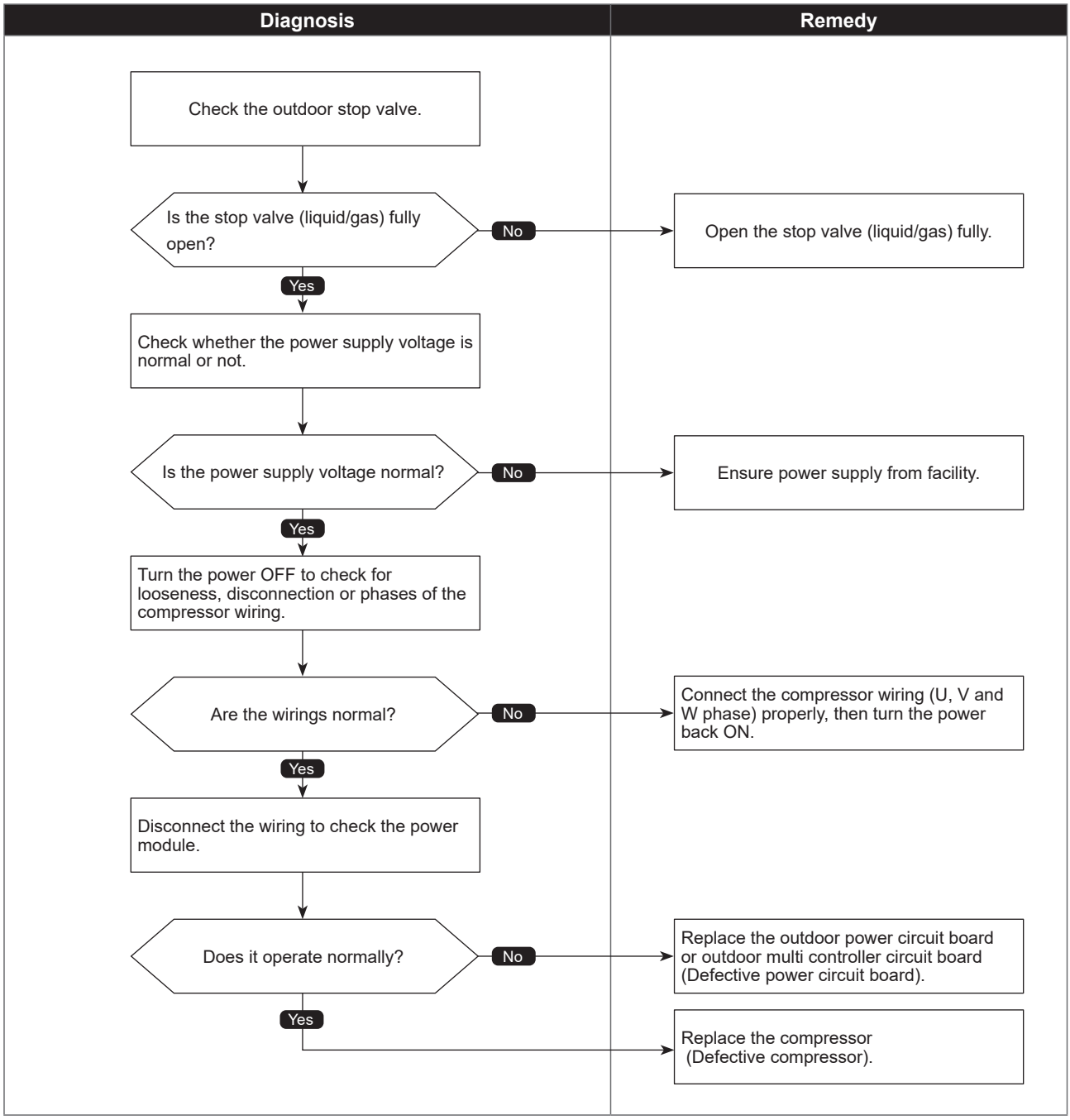

Check code

4400 (U8)

Fan trouble

Abnormal points and detection methods	Causes and checkpoints
If no rotational frequency is detected, or detected a value outside the specified range during fan motor operation.	①Malfunction of fan motor ②Disconnection of CNF connector ③Defective outdoor controller board

●Diagnosis of defects

Make sure to turn the power OFF before connecting/disconnecting any connectors, or replacing boards.

Diagnosis

Check the fuse on the outdoor controller board.

↓

Has the fuse melted?

- Yes (Melted) → Replace the outdoor controller board. Replace the defective fan motor.*
- No (Not melted) ↓

*For the detail, refer to "Check method of DC fan motor (fan motor/outdoor multi controller circuit board" in chapter 8-7.

Check the fan motor connector (CNF1 and CNF2) for a disconnection or looseness.

↓

Is there any abnormality such as disconnection, looseness or breakage?

- Yes → Connect the wiring/connector properly. Replace it in case of a breakage.
- No ↓

1 While the breaker is OFF, disconnect the compressor wirings (U/V/W) from the outdoor power circuit board.
2 While the breaker is OFF, disconnect the fan motor connector CNF1 and CNF2.
3 When 5 minutes have passed since turning ON the breaker, turn SW7-1 ON.
4 Check the voltage of the outdoor multi controller circuit board.
Test points are;
· VDC approx. 310 to 350 V DC (fan connector 1–4)
· VCC approx. 15 V DC (fan connector 5–4)
· VCC approx. 0–6.5 V DC (fan connector 6–4)

↓

Is the voltage normal?

- No → Replace the outdoor controller board.
- Yes → Replace the defective fan motor.

Notes
·Set SW7-1 OFF after the troubleshooting completes.
·The fan sometimes starts on-off cycle operation during low-load operation or cooling at low outside temperature on SM36/42/48.
It is not abnormal; the operation ensures reliability of the product.

Remedy

Check code

5101 (U3)

Compressor temperature thermistor (TH4) open/short

<Detected in outdoor unit>

Abnormal points and detection methods	Causes and checkpoints
If TH4 detects to be open/short. (The open/short detection is disabled for 10 minutes after compressor starts, during defrosting operation, or for 10 minutes after returning from the defrosting operation. The detection is also disabled when the outdoor temperature is 41°F [5°C] or less in cooling operation, and −4°F [−20°C] or less in heating.) Open: 37.4°F [3℃] or less Short: 422.6°F [217℃] or more TH4: Thermistor <Compressor>	① Disconnection or contact failure of connectors ② Characteristic defect of thermistor ③ Defective outdoor controller board

●Diagnosis of defects

Make sure to turn the power OFF before connecting/disconnecting any connectors, or replacing boards.

The black square (■) indicates a switch position.

Diagnosis | **Remedy**

Check the wiring and connector connection of TH4

Is there any abnormality such as disconnection, looseness or breakage?

Yes → Connect the wiring/connector properly. Replace the connector in case of breakage.

No

Disconnect the connector to check the resistance of TH4 using a multimeter.

Is the detected resistance normal?

No → Replace the thermistor.

Yes

Check the temperature of TH4.

The detected temperature of TH4 can be displayed by an operation of SW1 on the outdoor controller board.

SW1 Setting	Display on LED1, 2	Unit
ON / OFF 1 2 3 4 5 6 7 8	−99.9–999.9	°F

Is the detected temperature normal?

No → Replace the controller board (Malfunction of thermistor circuit).

Yes → No abnormality (A connector contact failure is suspected).

Check code

5102
(U4)

Suction pipe temperature thermistor (TH6) open/short

<Detected in outdoor unit>

Abnormal points and detection methods	Causes and checkpoints
If TH6 detects to be open/short. (The open/short detection is disabled during 10 seconds to 10 minutes. after compressor starts, during defrosting operation, or for 10 minutes after returning from the defrosting operation.) Open: −40°F [−40℃] or less Short: 194°F [90℃] or more TH6: Thermistor <Suction pipe>	① Disconnection or contact failure of connectors ② Characteristic defect of thermistor ③ Defective outdoor controller board

●Diagnosis of defects

Make sure to turn the power OFF before connecting/disconnecting any connectors, or replacing boards.

The black square (■) indicates a switch position.

Diagnosis | **Remedy**

Check the wiring and connector connection of TH6.

Is there any abnormality such as disconnection, looseness or breakage?

Yes → Connect the wiring/connector properly. Replace it in the case of breakage.

No ↓

Disconnect the connector to check the resistance of TH6 using a multimeter.

Is the detected resistance normal?

No → Replace the thermistor.

Yes ↓

Check the temperature of TH6.

The detected temperature of TH6 can be displayed by an operation of SW1 on the outdoor controller board.

SW1 Setting	Display on LED1,2	Unit
ON / OFF: 1 2 3 4 5 6 7 8	−99.9–999.9	°F

Is the detected temperature normal?

No → Replace the controller board (Malfunction of thermistor circuit).

Yes → No abnormality (A connector contact failure is suspected).

Check code

5105 (U4) Outdoor liquid pipe temperature thermistor (TH3) open/short

Abnormal points and detection methods	Causes and checkpoints
If TH3 detects to be open/short. (The open/short detection is disabled during 10 seconds to 10 minutes. after compressor starts, during defrosting operation, or for 10 minutes after returning from the defrosting operation.) Open: −40°F [−40℃] or less Short: 194°F [90℃] or more TH3: Thermistor <Outdoor liquid pipe>	① Disconnection or contact failure of connectors ② Characteristic defect of thermistor ③ Defective outdoor controller board

●Diagnosis of defects

Make sure to turn the power OFF before connecting/disconnecting any connectors, or replacing boards.

The black square (■) indicates a switch position.

Diagnosis

Check the wiring and connector connection of TH3.

↓

Is there any abnormality such as disconnection, looseness or breakage?

- Yes → Connect the wiring/connector properly Replace it in case of breakage.
- No ↓

Disconnect the connector to check the resistance of TH3 using a multimeter.

↓

Is the detected resistance normal?

- No → Replace the thermistor.
- Yes ↓

Check the temperature of TH3.

The detected temperature of TH3 can be displayed by an operation of SW1 on the outdoor controller board.

SW1 Setting	Display on LED1, 2	Unit
ON / OFF 1 2 3 4 5 6 7 8	−99.9–999.9	°F

↓

Is the detected temperature normal?

- No → Replace the controller board (Malfunction of thermistor circuit).
- Yes → No abnormality (A connector contact failure is suspected).

Check code

5106
(U4)

Ambient temperature thermistor (TH7) open/short

Abnormal points and detection methods	Causes and checkpoints
If TH7 detects to be open/short Open: −40°F [−40°C] or less Short: 194°F [90°C] or more TH7: Thermistor <Ambient>	①Disconnection or contact failure of connectors ②Characteristic defect of thermistor ③Defective outdoor controller board

●Diagnosis of defects

Make sure to turn the power OFF before connecting/disconnecting any connectors, or replacing boards.

The black square (■) indicates a switch position.

Diagnosis

Check the wiring and connector connection of TH7.

Is there any abnormality such as disconnection, looseness or breakage?

- Yes → Connect the wiring/connector properly. Replace it in case of breakage.
- No ↓

Disconnect the connector to check the resistance of TH7 using a multimeter.

Is the detected resistance normal?

- No → Replace the thermistor.
- Yes ↓

Check the temperature of TH7.

The detected temperature of TH7 can be displayed by an operation of SW1 on the outdoor controller board.

SW1 Setting	Display on LED1, 2	Unit
ON / OFF 1 2 3 4 5 6 7 8	−99.9–999.9	°F

Is the detected temperature normal?

- No → Replace the controller board (Malfunction of thermistor circuit).
- Yes → No abnormality (A connector contact failure is suspected).

Remedy

Check code

5109
(U4)

HIC pipe temperature thermistor (TH2) open/short

Abnormal points and detection methods	Causes and checkpoints
If TH2 detects to be open/short. Open: −40°F [−40°C] or less Short: 194°F [90°C] or more TH2: Thermistor <HIC pipe>	① Disconnection or contact failure of connectors ② Characteristic defect of thermistor ③ Defective outdoor controller board

●Diagnosis of defects

Make sure to turn the power OFF before connecting/disconnecting any connectors, or replacing boards.

The black square (■) indicates a switch position.

Diagnosis | **Remedy**

Check the wiring and connector connection of TH2.

Is there any abnormality such as disconnection, looseness or breakage?

- Yes → Connect the wiring/connector properly. Replace it in case of breakage.
- No ↓

Disconnect the connector to check the resistance of TH2 using a multimeter.

Is the detected resistance normal?

- No → Replace the thermistor.
- Yes ↓

Check the temperature of TH2.

The detected temperature of TH2 can be displayed by an operation of SW1 on the outdoor controller board.

SW1 Setting	Display on LED1,2	Unit
ON / OFF 1 2 3 4 5 6 7 8	−99.9–999.9	°F

Is the detected temperature normal?

- No → Replace the controller board (Malfunction of thermistor circuit).
- Yes → No abnormality (A connector contact failure is suspected.)

Check code

5110 (U4)

Heat sink temperature thermistor(TH8) open/short

Abnormal points and detection methods	Causes and checkpoints
If TH8 detects to be open/short. Open: −31.2°F [−35.1℃] or less Short: 338.5°F [170.3℃] or more TH8: Thermistor <Heat sink>	①Disconnection or contact failure of connectors ②Characteristic defect of thermistor ③Defective outdoor controller board

●Diagnosis of defects

Make sure to turn the power OFF before connecting/disconnecting any connectors, or replacing boards.

The black square (■) indicates a switch position.

Diagnosis

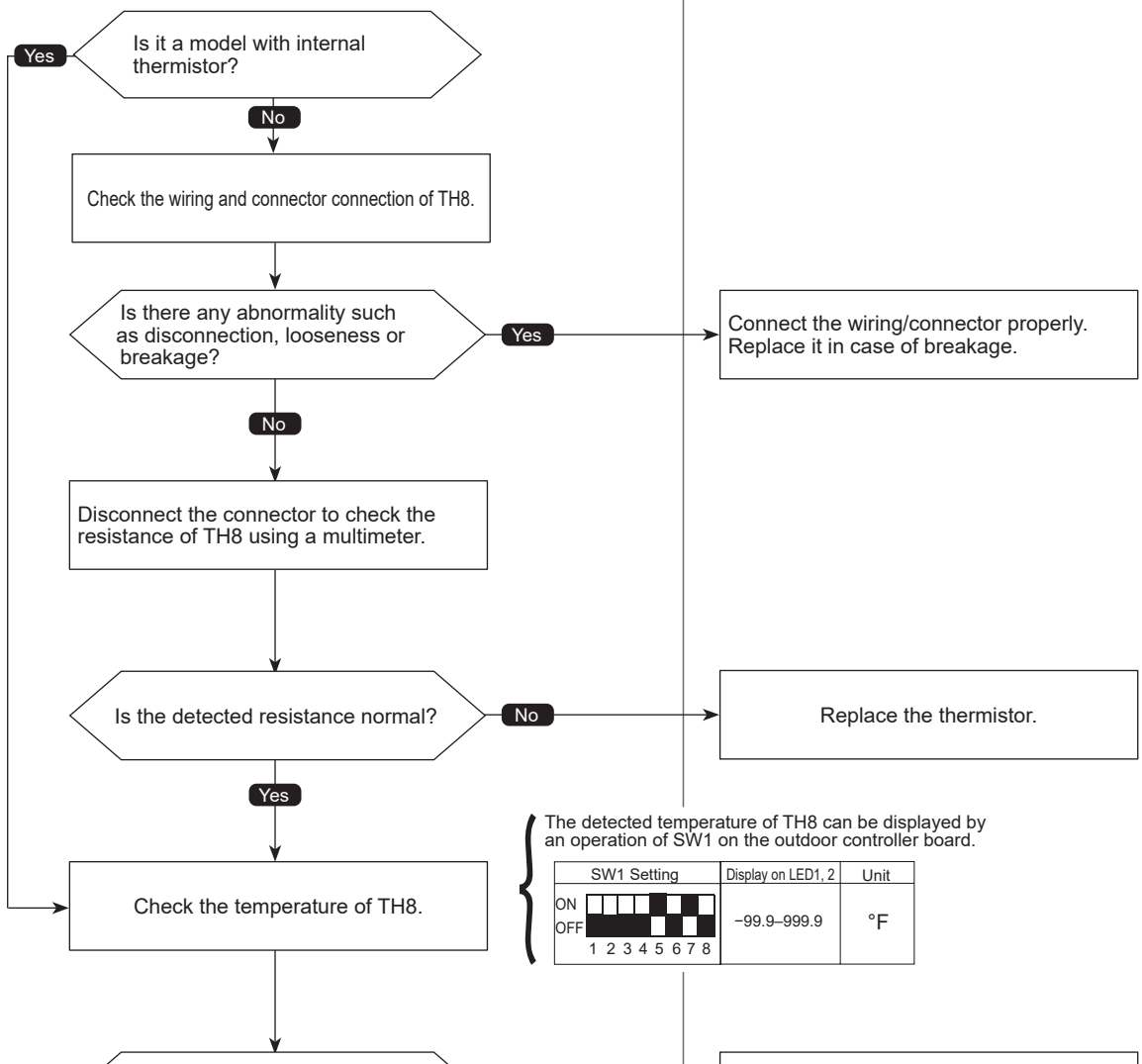

Remedy

Connect the wiring/connector properly. Replace it in case of breakage.

Replace the thermistor.

The detected temperature of TH8 can be displayed by an operation of SW1 on the outdoor controller board.

SW1 Setting	Display on LED1, 2	Unit
ON / OFF 1 2 3 4 5 6 7 8	−99.9–999.9	°F

Replace the outdoor controller board (Malfunction of thermistor circuit).

No abnormality (A connector contact failure is suspected.)

Check code

5201 (F5)

High pressure sensor (63HS) trouble

Abnormal points and detection methods	Causes and checkpoints
①When the detected pressure in the high pressure sensor is 14 PSIG or less during operation, the compressor stops operation and enters into an anti-restart mode for 3 minutes. ②When the detected pressure is 14 PSIG or less immediately before restarting, the compressor falls into an abnormal stop with a check code <5201>. ③For 3 minutes after compressor restarting, during defrosting operation, and for 3 minutes after returning from defrosting operation, above mentioned symptoms are not determined as abnormal.	①Defective high pressure sensor ②Decrease of internal pressure caused by gas leakage ③Disconnection or contact failure of connector ④Malfunction of input circuit on outdoor controller board

●Diagnosis of defects

Make sure to turn the power OFF before connecting/disconnecting any connectors, or replacing boards.

The black square (■) indicates a switch position.

Diagnosis

Check the wiring and connector connection.

Is there any abnormality such as disconnection, looseness or breakage?

Yes → Connect the wiring/connector properly. Replace it in case of breakage.

No

Check the internal pressure of the refrigerant circuit.

Is the detected internal pressure normal?

No → Check the refrigerant circuit, and recharge refrigerant after repairing the leakage.

Yes

Check the detected pressure in 63HS(*), then compare it with the internal pressure.

The detected pressure in 63HS can be displayed by an operation of SW1 on the outdoor controller board.

SW1 Setting	Display on LED1, 2	Unit
ON / OFF 1 2 3 4 5 6 7 8	−99.9–999.9	PSIG

*For the pressure, refer to "8-8.HOW TO CHECK COMPONENTS".

Is the detected pressure normal?

No → Replace the 63HS.

→ Replace the outdoor controller board.

Remedy

63HS: High pressure sensor

Check code

5202
(F3)

Low pressure sensor (63LS) trouble

Abnormal points and detection methods	Causes and checkpoints
① When the detected pressure in the low pressure sensor is −33 PSIG or less, or 329 PSIG or more during operation, the compressor stops operation with a check code <5202>. ② For 3 minutes after compressor restarting, during defrosting operation, and for 3 minutes after returning from defrosting operation, above mentioned symptoms are not determined as abnormal.	① Defective low pressure sensor ② Decrease of internal pressure caused by gas leakage ③ Disconnection or contact failure of connector ④ Malfunction of input circuit on outdoor controller board

●Diagnosis of defects

Make sure to turn the power OFF before connecting/disconnecting any connectors, or replacing boards.

The black square (■) indicates a switch position.

Diagnosis	Remedy

63LS: Low pressure sensor

Check the wiring and connector connection.

Is there any abnormality such as disconnection, looseness or breakage?

Yes → Connect the wiring/connector properly. Replace it in case of breakage.

No

Check the internal pressure of the refrigerant circuit.

Is the detected internal pressure normal?

No → Check the refrigerant circuit, and refill refrigerant after repairing the leakage.

Yes

Check the detected pressure in 63LS, then compare it with the internal pressure.

The detected pressure in 63LS can be displayed by an operation of SW1 on the outdoor controller board.

SW1 Setting	Display on LED1,2	Unit
ON / OFF 1 2 3 4 5 6 7 8	−99.9–999.9	PSIG

Is the detected pressure normal?

No → Replace the 63LS.

Replace the outdoor controller board.

Check code

5300
(UH)

Primary current error

Abnormal points and detection methods	Causes and checkpoints
If any of the following conditions is detected: ①Primary current sensor detects any of the following conditions (single phase unit only): ②Secondary current sensor detects 25 A or more. ③Secondary current sensor detects 1.0 A or less.	①Decrease/trouble of power supply voltage ②Disconnection of compressor wiring ③Current sensor trouble on outdoor power circuit board ④Wiring through current sensor (penetration type) is not done.

Model name	10 consecutive-second detection	One-time detection
MXZ-SM36/48NAM2	34 A	38 A
MXZ-SM36/42/48NAMHZ2 MXZ-SM60NAM2	37 A	40 A

●Diagnosis of defects

Make sure to turn the power OFF before connecting/disconnecting any connectors, or replacing boards.

Diagnosis | **Remedy**

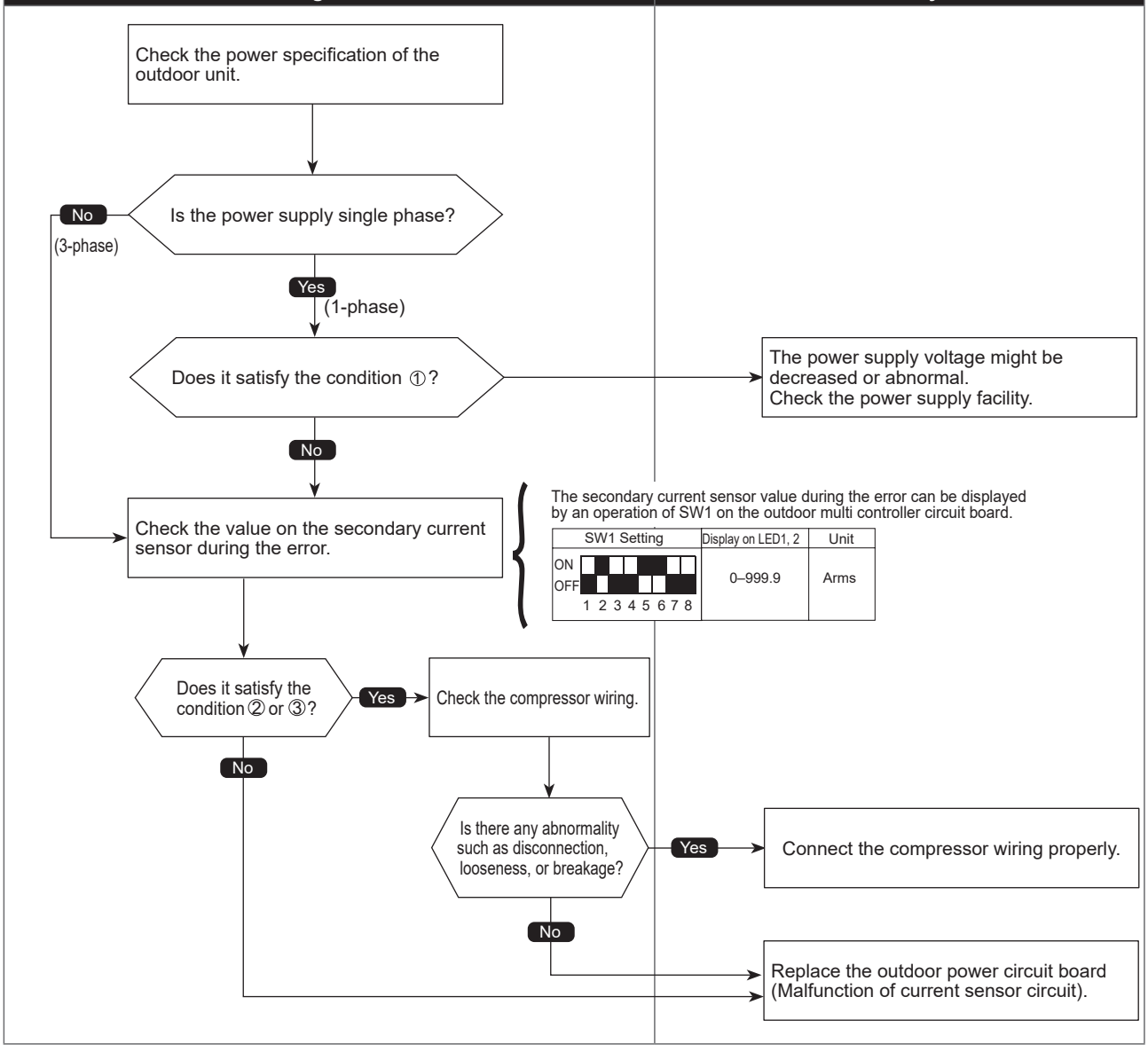

Check code

6600 (A0)

Duplex address error

Abnormal points and detection methods	Causes and checkpoints
If 2 or more units with the same address are existing.	① There are 2 units or more with the same address in their controller among outdoor unit, indoor unit, Fresh Master, Lossnay or remote controller ② Noise interference on indoor/outdoor connectors

●Diagnosis of defects

Make sure to turn the power OFF before connecting/disconnecting any connectors, or replacing boards.

Diagnosis	Remedy

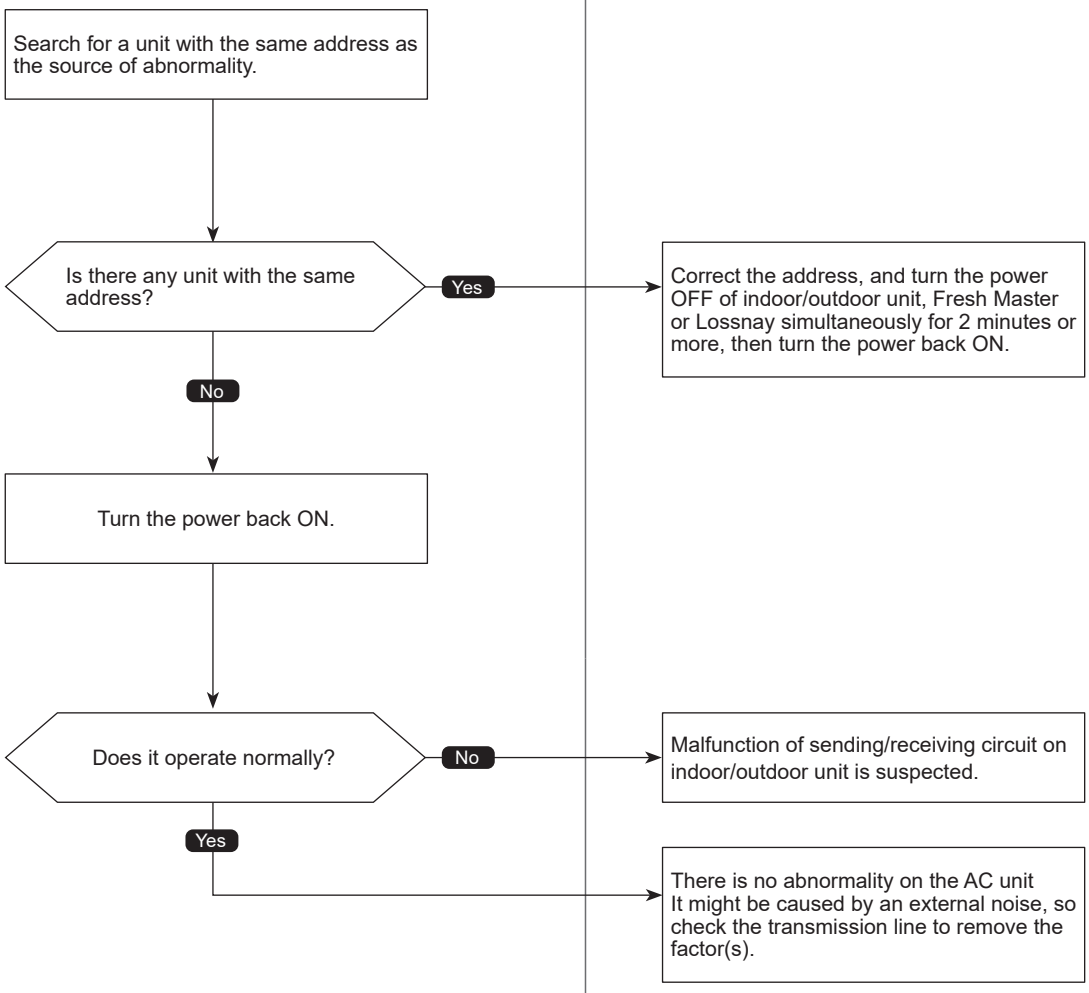

Check code

6602 (A2)

Transmission processor hardware error

Abnormal points and detection methods	Causes and checkpoints
If the transmission line shows "1" although the transmission processor transmitted "0".	① A transmitting data collision occurred because of a wiring work or polarity change has performed while the power is ON on either of the indoor/outdoor unit, Fresh Master or Lossnay ② Malfunction of transmitting circuit on transmission processor ③ Noise interference on indoor/outdoor connectors

●Diagnosis of defects

Make sure to turn the power OFF before connecting/disconnecting any connectors, or replacing boards.

Diagnosis	Remedy

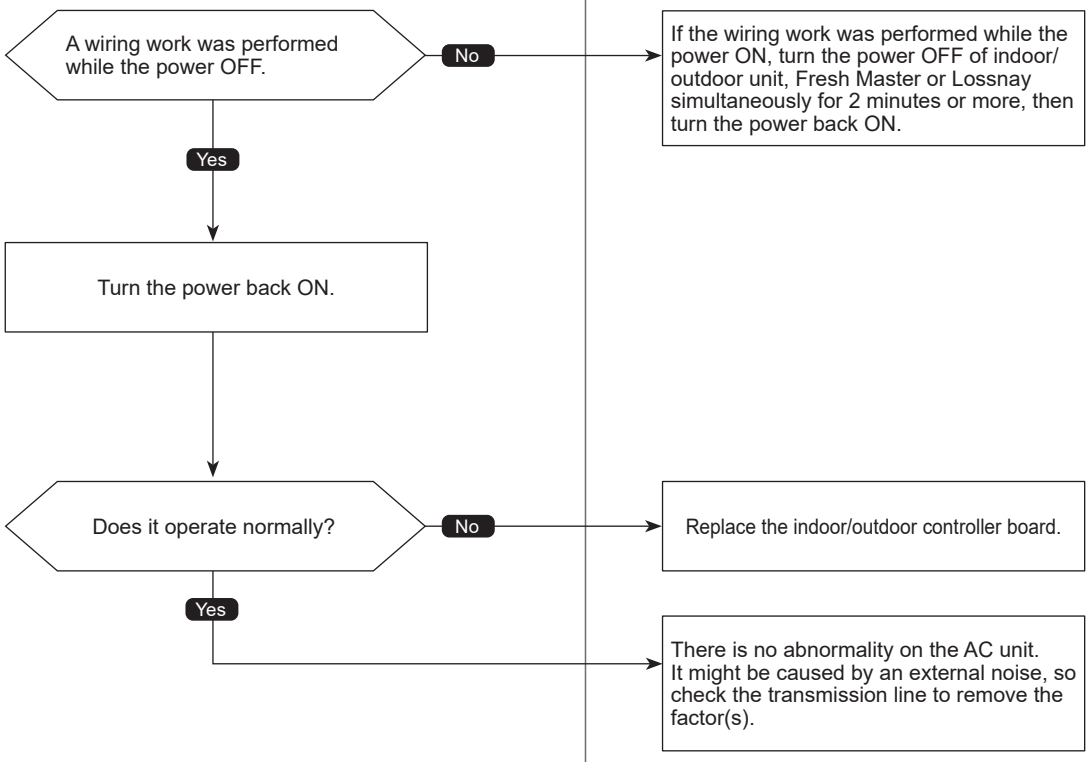

Check code

6603 (A3)

Transmission bus BUSY error

Abnormal points and detection methods	Causes and checkpoints
① An abnormality when no transmission status caused by transmitting data collision continues for 8 to 10 minutes. ② An abnormality when data cannot be output on the transmission line consecutively because of noise etc. for 8 to 10 minutes.	① The transmission processor is unable to transmit due to a short-cycle voltage such as noise is mixed on the transmission line. ② The transmission processor is unable to transmit due to an increase of transmission data amount caused by a miswiring of the terminal block (transmission line) (TB3) and the terminal block (centralized control line) (TB7) on the outdoor unit. ③ The share on transmission line becomes high due to a mixed transmission caused by a malfunction of repeater on the outdoor unit, which is a function to connect/disconnect transmission from/to control system and centralized control system.

●Diagnosis of defects

Make sure to turn the power OFF before connecting/disconnecting any connectors, or replacing boards.

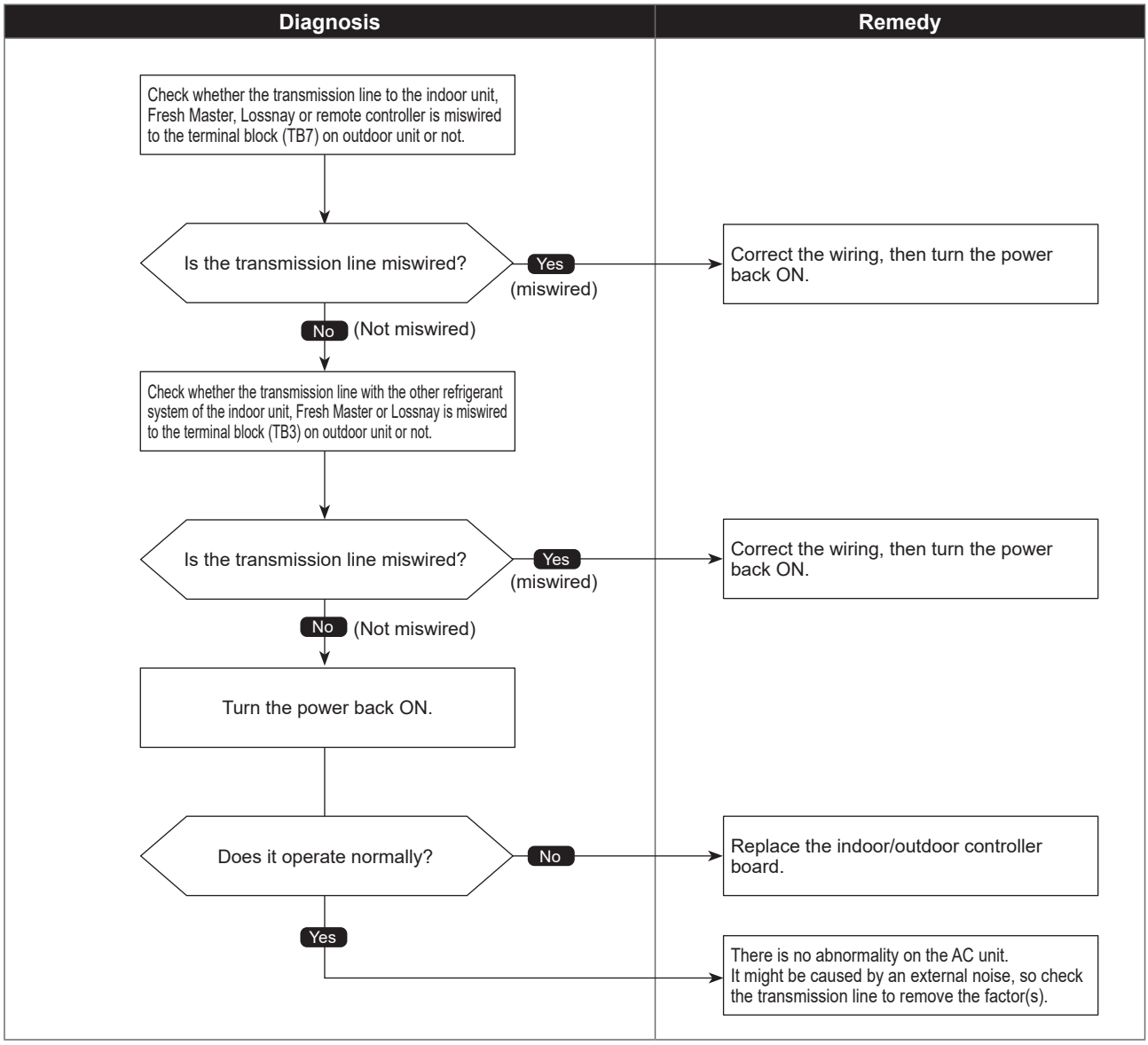

Check code

6606 (A6)

Signal communication error with transmission processor

Abnormal points and detection methods	Causes and checkpoints
① If the data of unit/transmission processor were not normally transmitted. ② If the address transmission from the unit processor was not normally transmitted.	①Accidental disturbance such as noise or lightning surge ②Hardware malfunction of transmission processor

●Diagnosis of defects

Make sure to turn the power OFF before connecting/disconnecting any connectors, or replacing boards.

Diagnosis	Remedy

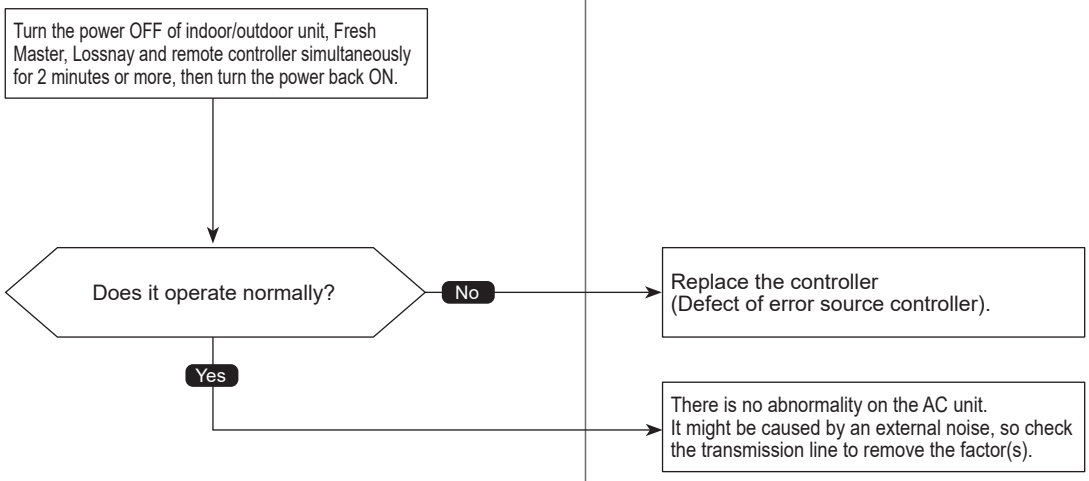

Check code

6607
(A7)

No ACK error

Abnormal points and detection methods	Causes and checkpoints
① Represents a common error detection An abnormality detected by the sending side controller when receiving no ACK from the receiving side, though signal was once sent. The sending side searches the error in 30 seconds interval for 6 times continuously.	① The previous address unit does not exist since the address switch was changed while in electric continuity status. ② Decline of transmission voltage/signal caused by tolerance over on transmission line ·At the furthest end: 656 ft [200 m] ·On remote controller line: 39 ft [12 m] ③ Decline of transmission voltage/ signal due to unmatched transmission line types ·Types for shield line: CVVS, CPEVS, or MVVS ·Line diameter: AWG 16 [1.25 mm^2] ④ Decline of transmission voltage/ signal due to excessive number of connected units ⑤ Malfunction due to accidental disturbance such as noise or lightning surge ⑥ Defect of error source controller
② The cause of displayed address and attribute is on the outdoor unit side. An abnormality detected by the indoor unit if receiving no ACK when transmitting signal from the indoor unit to the outdoor unit.	① Contact failure of indoor/outdoor unit transmission line ② Disconnection of transmission connector (CN2M) on indoor unit ③ Malfunction of sending/receiving circuit on indoor/ outdoor unit ④ Disconnection of the connectors on the circuit board ⑤ Cut off of power supply for outdoor unit caused by high pressure protection(63H).
③ The cause of displayed address and attribute is on the indoor unit side. An abnormality detected by the remote controller if receiving no ACK when sending data from the remote controller to the indoor unit.	① While operating with multi refrigerant system indoor units, an abnormality is detected when the indoor unit transmit signal to the remote controller during the other refrigerant-system outdoor unit is turned OFF, or within 2 minutes after it turned back ON. ② Contact failure of indoor unit or remote controller transmission line ③ Disconnection of transmission connector (CN2M) on indoor unit ④ Malfunction of sending/receiving circuit on indoor unit or remote controller
④ The cause of the displayed address and attribute is on the remote controller side An abnormality detected by the indoor unit if receiving no ACK when transmitting signal from the indoor unit to the remote controller.	① While operating with multi refrigerant system indoor units, an abnormality is detected when the indoor unit transmit signal to the remote controller during the other refrigerant-system outdoor unit is turned OFF, or within 2 minutes after it turned back ON. ② Contact failure of indoor unit or remote controller transmission line ③ Disconnection of transmission connector (CN2M) on indoor unit ④ Malfunction of sending/receiving circuit on indoor unit or remote controller

No ACK error

Abnormal points and detection methods	Causes and checkpoints
⑤ The cause of displayed address and attribute is on the Fresh Master side. An abnormality detected by the indoor unit if receiving no ACK when transmitting signal from the indoor unit to the Fresh Master.	① While the indoor unit is operating with multi refrigerant system Fresh Master, an abnormality is detected when the indoor unit transmits signal to the remote controller while the outdoor unit with the same refrigerant system as the Fresh Master is turned OFF, or within 2 minutes after it turned back ON. ② Contact failure of indoor unit or Fresh Master transmission line ③ Disconnection of transmission connector (CN2M) on indoor unit or Fresh Master ④ Malfunction of sending/receiving circuit on indoor unit or Fresh Master
⑥ The cause of displayed address and attribute is on Lossnay side. An abnormality detected by the indoor unit if receiving no ACK when the indoor unit transmit signal to the Lossnay.	① An abnormality is detected when the indoor unit transmits signal to Lossnay while the Lossnay is turned OFF. ② While the indoor unit is operating with the other refrigerant Lossnay, an abnormality is detected when the indoor unit transmits signal to the Lossnay while the outdoor unit with the same refrigerant system as the Lossnay is turned OFF, or within 2 minutes after it turned back ON. ③ Contact failure of indoor unit or Lossnay transmission line ④ Disconnection of transmission connector (CN2M) on indoor unit ⑤ Malfunction of sending/receiving circuit on indoor unit or Lossnay
⑦The controller of displayed address and attribute is not recognized.	① The previous address unit does not exist since the address switch was changed while in electric continuity status. ② An abnormality detected at transmitting from the indoor unit since the Fresh Master/Lossnay address are changed after synchronized setting of Fresh Master/Lossnay by the remote controller.

Check code

6607 (A7)

No ACK error

Chart 3 of 4

●Diagnosis of defects

Make sure to turn the power OFF before connecting/disconnecting any connectors, or replacing boards.

Note:

When the address of the outdoor unit is displayed as abnormal, the outdoor circuit board may be faulty. If the unit is not restored after conducting the following procedure, check the outdoor circuit board.

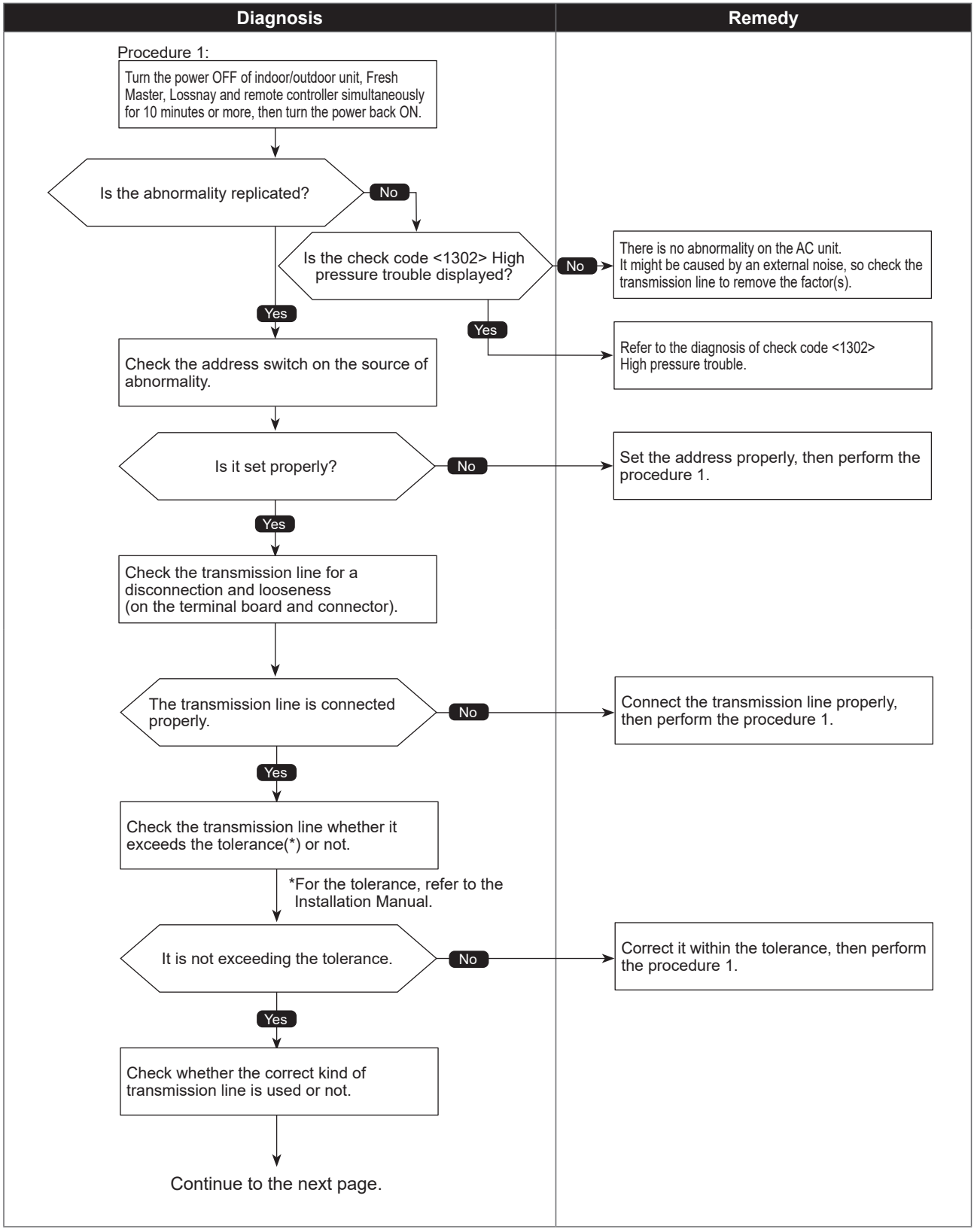

No ACK error

●Diagnosis of defects

Make sure to turn the power OFF before connecting/disconnecting any connectors, or replacing boards.

Diagnosis	Remedy
Continued from the previous page.	
Is the correct kind of transmission line used?	
No	Apply the correct kind of transmission line, then perform the procedure 1.
Yes	
Is it operating in multi refrigerant system?	
No	When operating in a single refrigerant system (single indoor unit), the controller of the displayed address/attribute is defective.
Yes	
When operating in a multi refrigerant system (2 or more outdoor units), check if any of the indoor unit stores non-existing address information.	
Is the address information correct?	
No	Delete the unnecessary address using a manual setting function on the remote controller (Only for operating in a system with the Fresh Master/ Lossnay is connected, or in a multi refrigerant system with group setting is set).
Yes	
Replace the controller board which the displayed address/attribute belongs to.	
Does it operate normally?	
No	Defective outdoor controller board (repeater circuit) on the outdoor unit is suspected. Replace the outdoor controller board one by one, then check for normal operation.
Yes	
	Complete.

Check code

6608 (A8)

No response frame error

Abnormal points and detection methods	Causes and checkpoints
If receiving no response command while already received ACK. The sending side searches the error in 30 seconds interval for 6 times continuously.	①Continuous failure of transmission due to noise etc ②Decline of transmission voltage/signal caused by tolerance over on transmission line ·At the furthest end: 656 ft [200 m] ·On remote controller line: 39 ft [12 m] ③Decline of transmission voltage/signal due to unmatched transmission line types ·Types for shield line: CVVS, CPEVS, or MVVS ·Line diameter: AWG 16 [1.25 mm^2] ④Accidental malfunction of error source controller

●Diagnosis of defects

Make sure to turn the power OFF before connecting/disconnecting any connectors, or replacing boards.

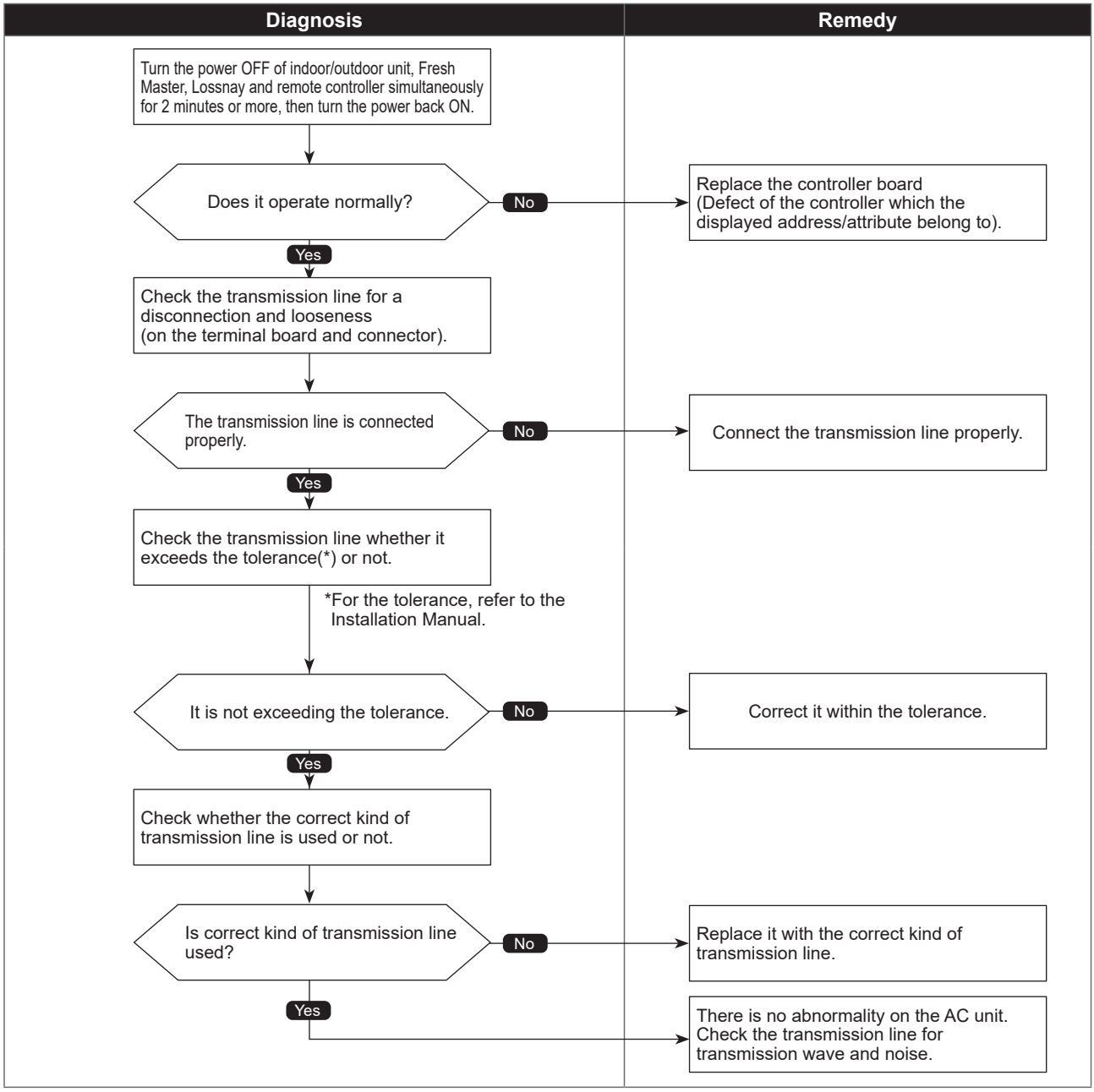

Check code

6831, 6834 (E0/E4)

MA communication receive error

Chart 1 of 2

Abnormal points and detection methods	Causes and checkpoints
Detected in remote controller or indoor unit: ① When the main or sub remote controller cannot receive signal from indoor unit which has the "0" address. ② When the sub remote controller cannot receive signal. ③ When the indoor controller board cannot receive signal from remote controller or another indoor unit. ④ When the indoor controller board cannot receive signal.	① Contact failure of remote controller wirings ② Irregular Wiring (A wiring length, number of connecting remote controllers or indoor units, or a wiring thickness does not meet the conditions specified in the chapter "Electrical Work" in the indoor unit Installation Manual.) ③ Malfunction of the remote controller sending/receiving circuit on indoor unit with the LED2 is blinking. ④ Malfunction of the remote controller sending/receiving circuit ⑤ Remote controller transmitting error caused by noise interference

●Diagnosis of defects

Make sure to turn the power OFF before connecting/disconnecting any connectors, or replacing boards

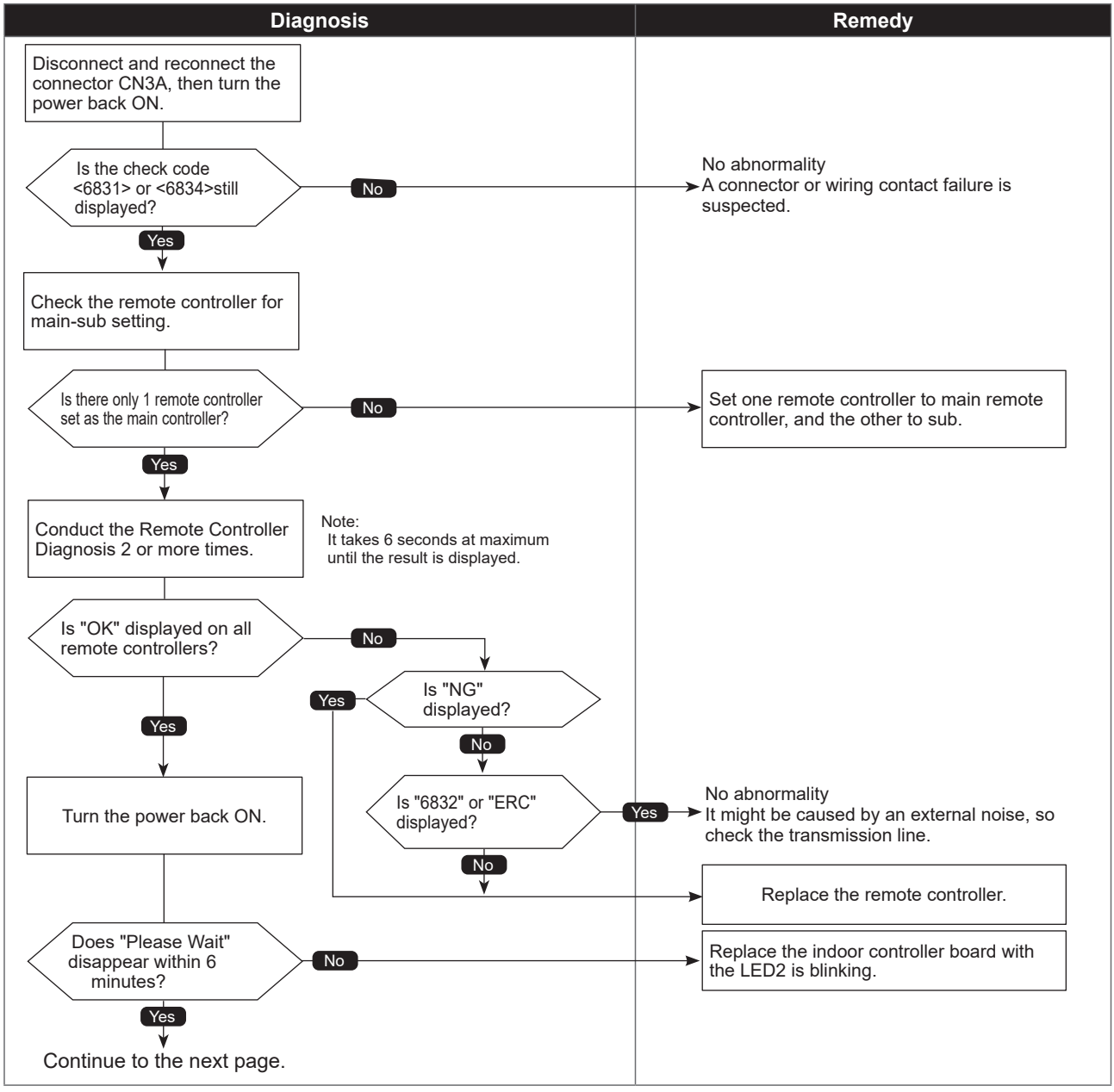

MA communication receive error

●Diagnosis of defects

Make sure to turn the power OFF before connecting/disconnecting any connectors, or replacing boards

Diagnosis	Remedy
Continued from the previous page. Refer to the chapter "Electrical Work". Is the wiring connected properly, meeting the condition? No →	Connect the wiring properly as specified in the chapter "Electrical Work" in the indoor unit Installation Manual.
Yes →	No abnormality It might be caused by an external noise, so check the transmission line to remove the factor(s).

Check code

6832, 6833 (E3/E5)

MA communication send error

Abnormal points and detection methods	Causes and checkpoints
Detected in remote controller or indoor unit.	① There are 2 remote controllers set as main. ② Malfunction of remote controller sending/receiving circuit ③ Malfunction of sending/receiving circuit on indoor controller board ④ Remote controller transmitting error caused by noise interference

●Diagnosis of defects

Make sure to turn the power OFF before connecting/disconnecting any connectors, or replacing boards

Diagnosis / Remedy

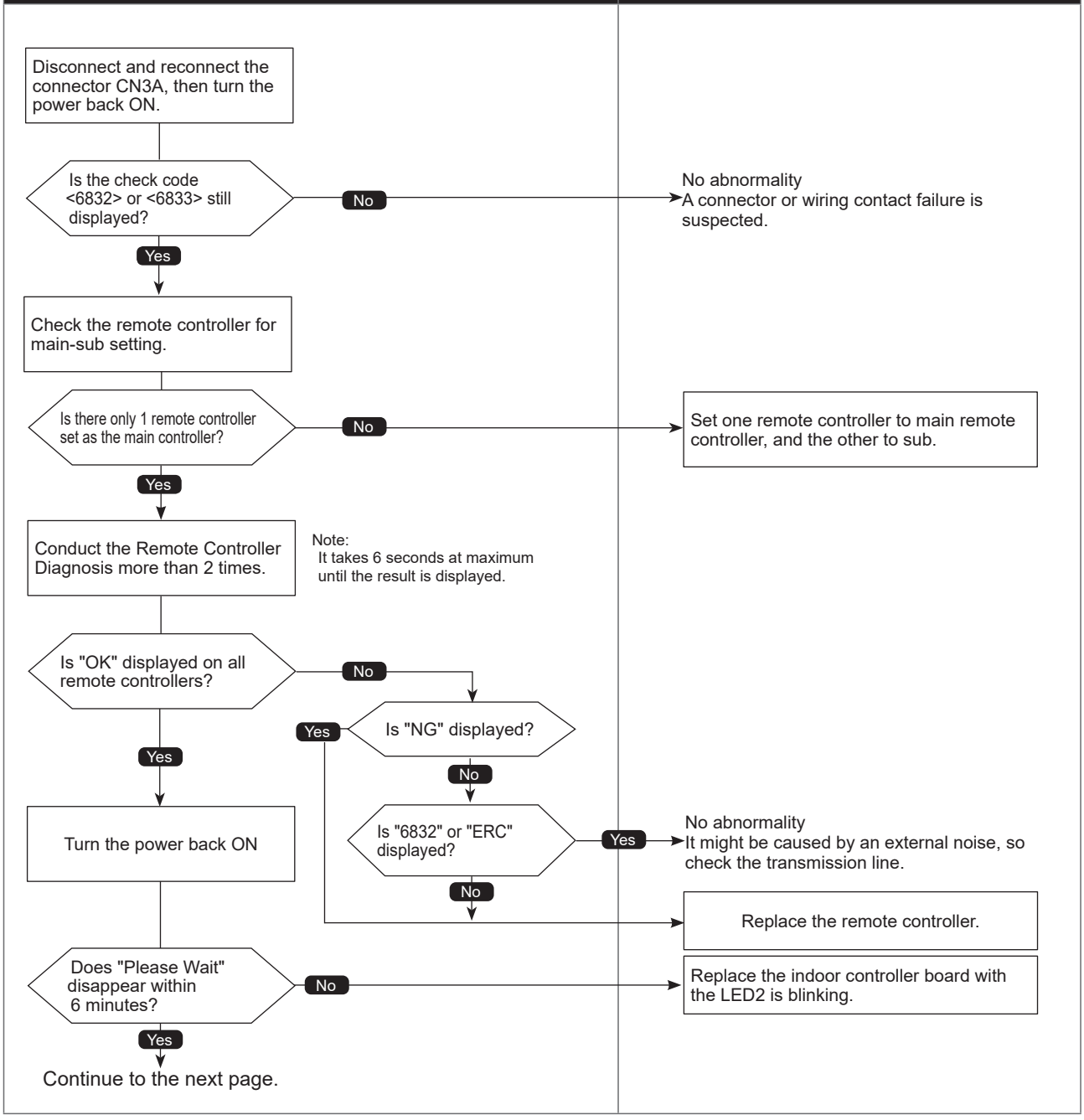

MA communication send error

●Diagnosis of defects

Make sure to turn the power OFF before connecting/disconnecting any connectors, or replacing boards

Diagnosis	Remedy
Continued from the previous page.	
Refer to the chapter "Electrical Work".	
Is the wiring connected properly, meeting the condition? — No	Connect the wiring properly as specified in the chapter "Electrical Work" in the indoor unit Installation Manual.
Yes	No abnormality It might be caused by an external noise, so check the transmission line to remove the factor(s).

Check code

7100 (EF)

Total capacity error

Abnormal points and detection methods	Causes and checkpoints
When the total capacity of connected indoor units exceeds the specified capacity (130% of the outdoor unit capacity), a check code <7100> is displayed.	① The total capacity of connected indoor units exceeds the specified capacity (without Branch Box / with Branch Box). · SM36: up to code 32/29 · SM42: up to code 39/35 · SM48: up to code 43/40 · SM60: up to code 56/53 ② The model name code of the outdoor unit is registered wrongly.

●Diagnosis of defects

Make sure to turn the power OFF before connecting/disconnecting any connectors, or replacing boards.

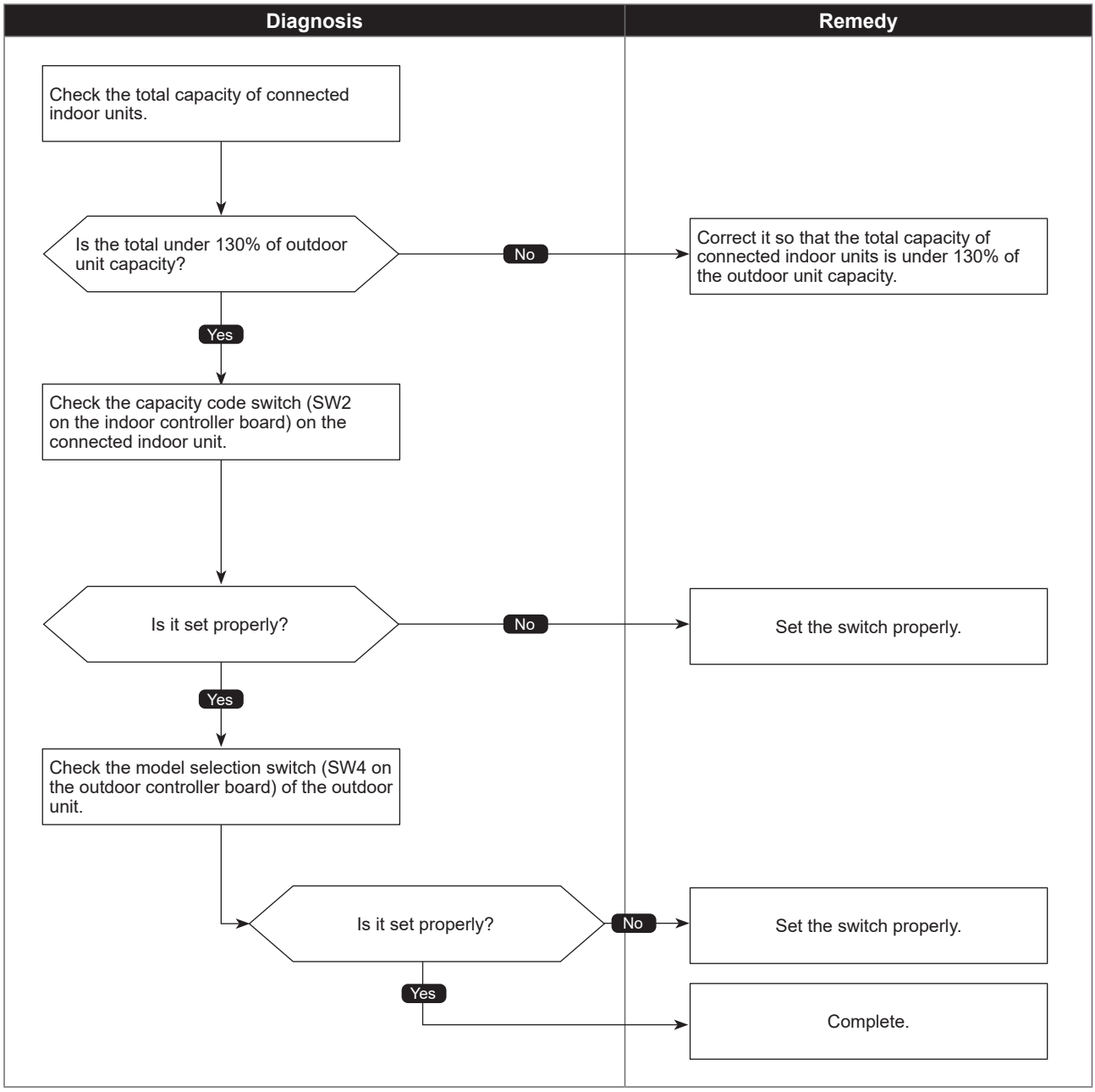

Check code

7101 (EF)

Capacity code error

Abnormal points and detection methods	Causes and checkpoints
When the capacity of connected indoor unit is over, check code <7101> is displayed.	The model name of connected indoor unit (model code) is read as incompatible.

●Diagnosis of defects

Make sure to turn the power OFF before connecting/disconnecting any connectors, or replacing boards.

Diagnosis	Remedy

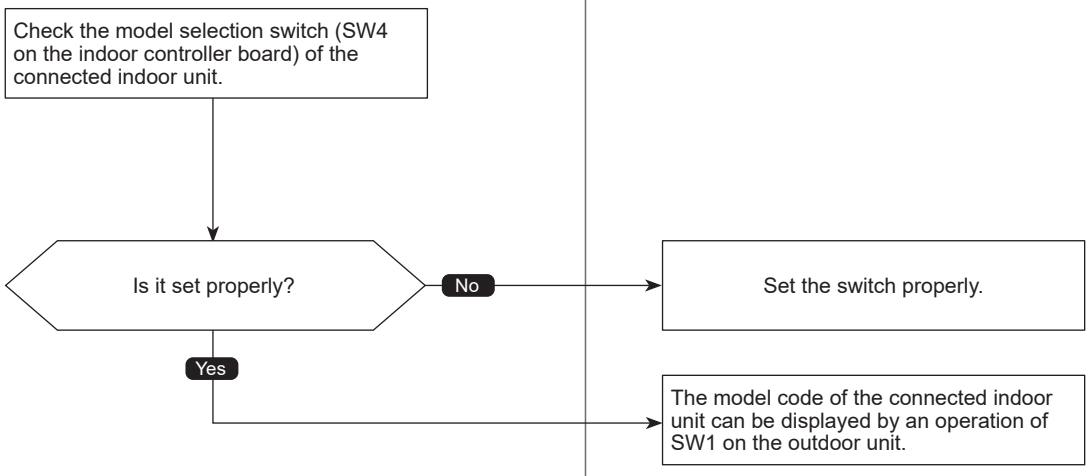

Check code

7102 (EF)

Connecting excessive number of units and branch boxes

Abnormal points and detection methods	Causes and checkpoints
When the connected indoor units exceed the limit, a check code <7102> is displayed.	Connecting more indoor units than the limit. Abnormal if connecting status does not comply with the following limit; ①Maximum connectable indoor unit. ②Connect at least 1 indoor unit (Abnormal if connected none). ③Connectable up to 2 branch boxes.

●Diagnosis of defects

Make sure to turn the power OFF before connecting/disconnecting any connectors, or replacing boards.

Diagnosis	Remedy

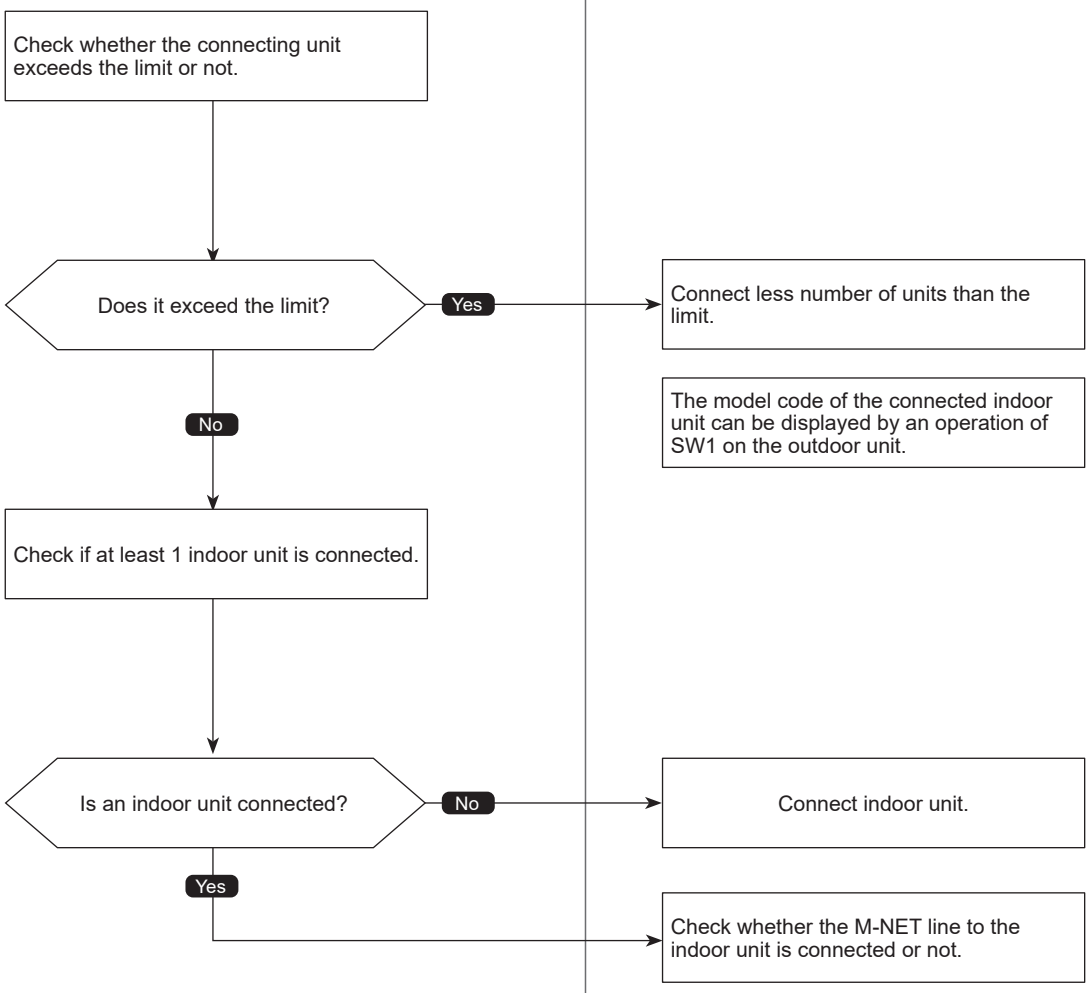

Check code

7105 (EF)

Address setting error

Abnormal points and detection methods	Causes and checkpoints
The address setting of outdoor unit or branch box is wrong.	Wrongly set address of branch box The outdoor unit is not set in 000, or in the range of 51 to 100.

●Diagnosis of defects

Make sure to turn the power OFF before connecting/disconnecting any connectors, or replacing boards.

Diagnosis	Remedy

<Outdoor unit>

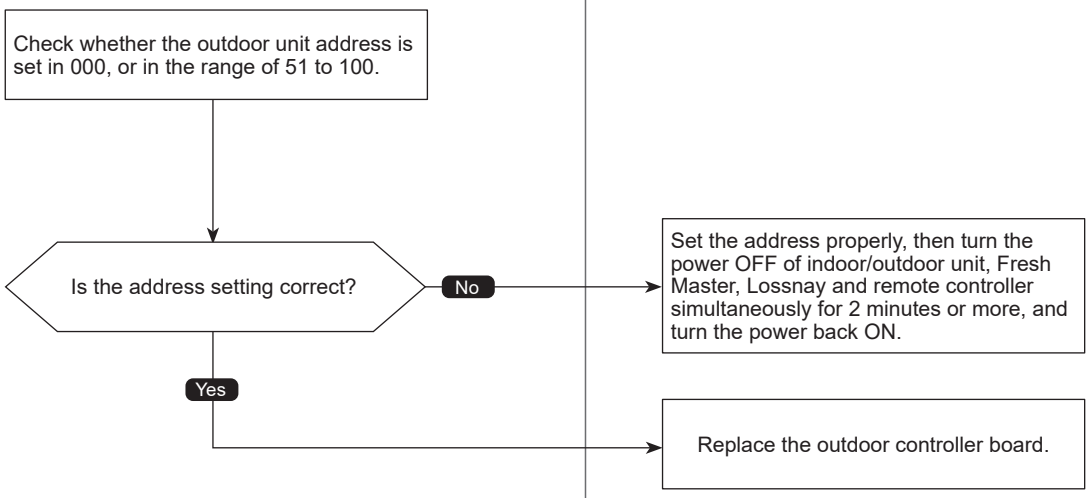

<Branch box>

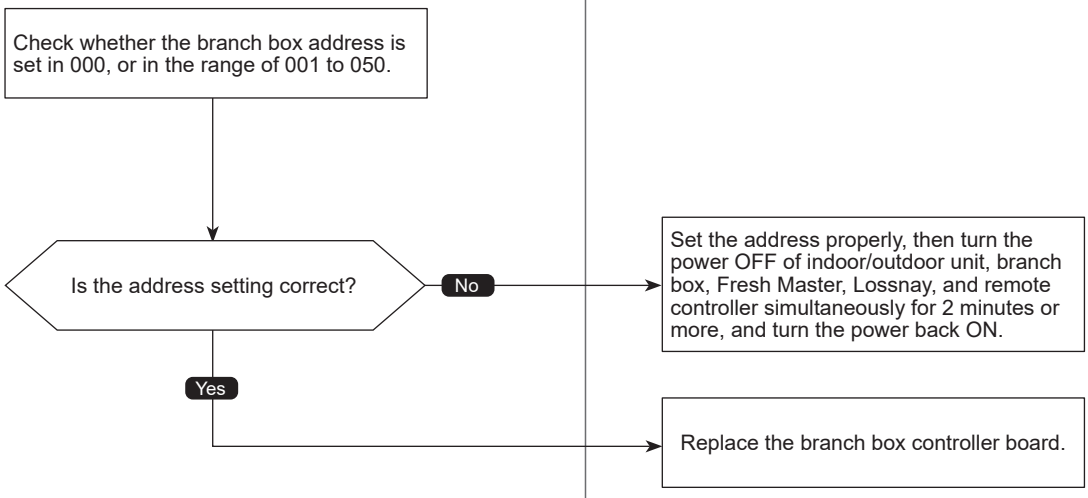

Note: Branch box address
When setting the address, use a number within the range of 1–50.
Ex. The set address is (47) and there are 5 indoor units (A, B, C, D, and E).
If A: (47), B: (48), C: (49), D: (50), and E: (51), E is incorrect because it exceeds 50.

Check code

7130 (EF)

Incompatible unit combination error

Abnormal points and detection methods	Causes and checkpoints
When the connected indoor unit is not compatible with the outdoor unit, the outdoor unit detects the error at startup.	Connecting indoor unit(s) which is not authorized to connect to the outdoor unit.

●Diagnosis of defects

Make sure to turn the power OFF before connecting/disconnecting any connectors, or replacing boards.

Diagnosis	Remedy

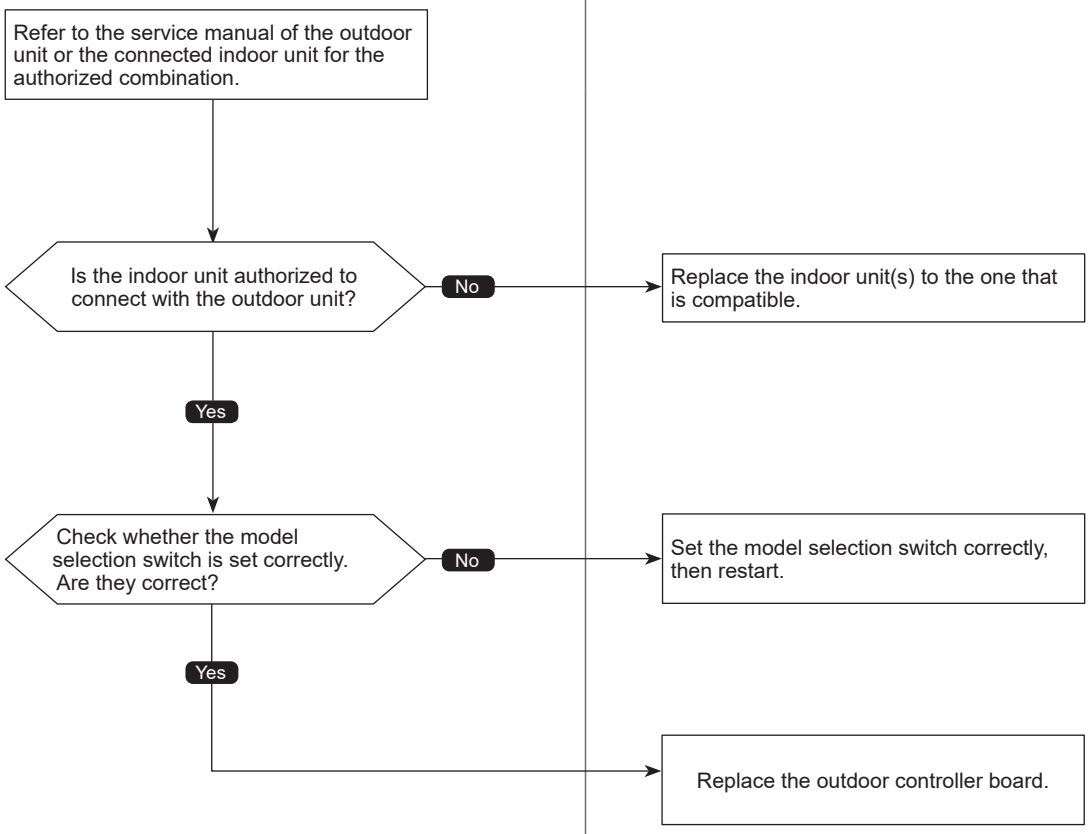

8-2. REMOTE CONTROLLER DIAGNOSIS

Refer to "12-8. REMOTE CONTROLLER CHECK" for MA remote controller system.

8-3. REMOTE CONTROLLER TROUBLE

For the troubleshooting, refer to the remote controller's manuals.

8-4. THE FOLLOWING SYMPTOM DO NOT REPRESENT TROUBLE (EMERGENCY)

Symptom	Display of remote controller	CAUSE
Even the cooling (heating) operation selection button is pressed, the indoor unit cannot be operated.	"Cool (Heat)" blinks	The indoor unit cannot cool (Heat) if other indoor units are heating (Cooling).
The auto vane runs freely.	Normal display	Because of the control operation of auto vane, it may change over to horizontal blow automatically from the downward blow in cooling because the downward blow operation has been continued for 1 hour. At defrosting in heating, hot adjusting and thermostat OFF, it automatically changes over to horizontal blow.
Fan setting changes during heating.	Normal display	Ultra-low speed operation is commenced at thermostat OFF. Light air automatically change over to set value by time or piping temperature at thermostat ON.
Fan stops during heating operation.	"Heat Defrost ☼ "	The fan stops during defrosting.
Fan does not stop while operation has been stopped.	Light out	Fan runs for 1 minute after stopping to exhaust residual heat (only in heating).
No setting of fan while start SW has been turned on.	"Heat Standby ☼ "	Ultra-low speed operation for 5 minutes after SW ON or until piping temperature reaches 95°F [35°C]. Then low speed operates for 2 minutes and operates at the normal set air volume. (Hot adjust control)
Indoor unit remote controller shows “Please Wait" indicator for about 2 minutes when turning ON power supply.	“Please Wait” blinks	The system is in the process of startup. Operate remote controller again after “Please Wait” disappears.
Drain pump does not stop while unit has been stopped.	Light out	After a stop of cooling operation, unit continues to operate drain pump for 3 minutes and then stops.
Drain pump continues to operate while unit has been stopped.	—	Unit continues to operate drain pump if drainage is generated, even during a stop.

8-5. INTERNAL SWITCH FUNCTION TABLE

The black square (■) indicates a switch position.

Switch	Step	Function	Operation in Each Switch Setting			Remarks	Purpose	Additional Information
			ON	OFF	When to Set			
SWU1 ones digit SWU2 tens digit	Rotary switch	SWU2 (tens digit) SWU1 (ones digit)			Before turning the power ON	<Initial settings> SWU2 (tens digit) SWU1 (ones digit)	—	—
SW1 Digital Display Switch	1–8	ON / OFF 1 2 3 4 5 6 7 8			Can be set either during operation or not.	<Initial settings> ON / OFF 1 2 3 4 5 6 7 8	—	—
SW2 Function Switch	1	Selects operating system startup	With centralized controller	Without centralized controller	Before turning the power ON	<Initial settings> ON / OFF 1 2 3 4 5 6	Turn ON when the centralized controller is connected to the outdoor unit.	SW2-1 must be turned ON if a central controller is connected to the system. An example of this would be a TC-24, EW-50A, AG150, AE50 or AE200. If SW2-1 is not turned on, while using a central controller, in rare circumstances problems may be encountered such as indoor units not responding to group commands. Therefore, turning SW2-1 ON is recommended if a central controller is used.
	2	Connection Information Clear Switch	Clear	Do not clear			When relocating units or connecting additional units.	—
	3	Abnormal data clear switch input	Clear abnormal data	Normal	OFF to ON any time after the power is turned on.		To delete an error history.	
	4	Pump down	ON	OFF	During compressor running		To facilitate outdoor unit the pumping down operation. Frequency = Fixed to 65 Hz Indoor-linear expansion valve = Fully open Outdoor fan step = Fixed to 10	Please refer to a section referring to the pumping down on outdoor units Installation Manuals. It might not be possible to collect all the refrigerant if the amount is excessive.
	5	Connect branch box	Connect	Not connect	Before the power is turned ON.	<Initial settings> OFF	—	—
	6	—	—	—	—	—	—	—
SW2/ SW4/ SW8/ SW9 Model Switch	1–6	MODEL SELECTION 1:ON 0:OFF MODELS / SW2 / SW4 / SW8 / SW9 MXZ-SM36NAM2 / MXZ-SM48NAM2 / MXZ-SM60NAM2 MXZ-SM36NAMHZ2 / MXZ-SM42NAMHZ2 / MXZ-SM48NAMHZ2			Before the power is turned ON.	<Initial settings> Set for each capacity.	—	—
SW3 Trial operation	1	ON/OFF from outdoor unit	ON	OFF	Any time after the power is turned ON.	<Initial settings> ON / OFF 1 2	—	—
	2	Mode setting	Heating	Cooling			—	—
SW5 Function switch	1	—	—	—	Can be set when off or during operation	<Initial settings> ON / OFF 1 2 3 4 5 6 7 8	—	—
	2	Change the indoor unit's LEV opening at startup	Enable	Normal			To set the LEV opening at startup higher than usual. (+150 pulses) To improve the operation with the LEV almost clogged.	The refrigerant flow noise at start-up become louder.
	3	—	—	—			—	—
	4	Auxiliary heater	Enable	Disable	Before the power is turned ON.		Turn ON when an auxiliary heater is connected. (It transmits a connection permission signal of the auxiliary heater to the connected CITY MULTI indoor unit.)	Turn ON only when the auxiliary heater is connected and operated.
	5	Change the indoor unit's LEV opening at defrost	Enable	Normal	Can be set when OFF or during operation		To set the LEV opening higher than usual during defrosting operation. (Only Qj ≤ 10 is valid, + 300 pulses) To avoid the discharge temperature increase and provide efficient defrosting operation.	The refrigerant flow noise during the defrosting operation becomes louder.
	6	Switching the target sub cool (Heating mode)	Enable	Normal			To decrease the target sub cool value. To reduce the discharge temperature decrease due to refrigerant liquid accumulation in the units.	A refrigerant flow noise might be generated if the sub cool value is too small.

Continue to the next page

Switch	Step	Function	Operation in Each Switch Setting			Remarks	Purpose	Additional Information
			ON	OFF	When to Set			
SW5 Function switch	7	During the outdoor unit is in HEAT operation, additionally increase about 50 to 70 pulses of the LEV opening on the indoor unit which is in FAN, STOP, COOL or thermo-OFF*1.	Active	Inactive	Can be set when OFF or during operation	<Initial settings> ON OFF 1 2 3 4 5 6 7 8	To additionally increase about 50 to 70 pulses of the LEV opening for units other than in HEAT operation. To avoid a refrigerant shortage (less capacity) due to refrigerant liquid accumulation in the units which is not in operation.	A refrigerant flow noise might be generated in units other than the one in operation.
	8	During the outdoor unit is in operation, fully closing the linear expansion valve on the indoor unit which is in FAN or COOL.*2	Enable	Normal	Before turning the power ON.		To reduce the room temperature increase by setting the LEV opening lower for the units in thermo-OFF operation.	The refrigerant is more likely to collect in the units with thermo-OFF operation, and causing the units refrigerant shortage. (Results in less capacity and increase of discharge temperature.)
SW6 Function switch	1	—	—	—	—	<Initial settings> ON OFF 1 2 3 4 5 6 7 8	—	—
	2	—	—	—	—		—	—
	3	—	—	—	—		—	—
	4	Change of defrosting control	Enable (For high humidity)	Normal	Can be set when OFF or during operation		To shorten the defrosting prohibition time in high humidity (or heavy snow) region, in order to reduce malfunctions caused by frost .	The performance of the HEAT operation is somewhat reduced since the defrosting operation is frequently performed.
	5	—	—	—			—	—
	6	Switching the target discharge pressure (Pdm)	Enable	Normal		SW6-6: OFF / ON Target Pdm (kg/cm²): 31.5 / 33.5	To raise the performance by setting the Pdm higher during HEAT operation.	Power consumption is raised due to a higher frequency. (The performance would not be raise at the maximum operating frequency.)
	7	Switching (1) the target evaporation temperature (ETm)	Enable	Normal		SW6-7: OFF / ON / OFF / ON SW6-8: OFF / OFF / ON / ON Target ETm (°F(°C)): 48(9) / 52(11) / 43(6) / 57(14)	To raise/reduce the performance by changing the target ETm during COOL operation. Switch to raise the performance: raises the performance Switch to reduce the performance: prevents dew condensation	Switching it to raise the performance, it raises the power consumption, and produces more dew condensation. Switching it to reduce the performance, it makes the performance insufficient.
	8	Switching (2) the target evaporation temperature (ETm)	Enable	Normal				
SW7 Function switch	1	Ignore current sensor abnormality and rotational frequency abnormality of outdoor fan motor	Enable	Normal	After turning the power ON	<Initial settings> <SM36/48/60NAM> ON OFF 1 2 3 4 5 6	To perform a test run for electrical parts alone without running the compressor. Also, to perform the troubleshooting of electrical parts without operating the outdoor unit's fan.	Make sure to connect the connectors to the compressor after checking the electrical parts. Be careful not to get electrical shock while working on electrical parts.
	2	Setting to energize the freeze stat heater (optional part)	During heating operation only*3	Include when the heating operation is OFF.*4	Can be set when OFF or during operation		It reduces snow on the base, even it blows inside the unit, by setting the base heater ON while the HEAT operation is stopped.	Power consumption raises while the operation is stopped.
	3	High heating performance mode (except for NAMHZ2 model)	Enable	Normal	Anytime	<SM36/42/48NAMHZ> ON OFF 1 2 3 4 5 6	To raise the performance of HEAT operation if it is insufficient.	The performance may not be raised depending on the capacity of indoor units in operation, or outside air temperature.
	4	Maximum frequency down at 1 hour after COOL operation	Enable	Normal	Can be set when OFF or during operation		To reduce dew condensation on the indoor unit by lowering the frequency.	The performance might be insufficient.
	5	Simultaneous cooling and heating with external heater	Enable	Disable	Anytime		The simultaneous operation of cooling and heating will be possible by installing an external heater to the CITY MULTI indoor unit.	For the installation of external heater and the indoor unit setting, refer to the indoor unit service manual.
	6	Manual defrost	Manual defrost	Normal	During compressor running in HEAT mode.		Turn ON when it is necessary to perform the defrosting operation forcedly. (Effective only at startup, or 10 minutes after the last defrosting operation)	It performs the defrosting operation forcedly. (HEAT operation is stopped temporarily.)
SW9 Function Switch	1	Auto change over from remote controller (IC with the minimum address)	Enable	Disable	Before turning the power ON	<Initial settings> <SM36/42/48> ON OFF 1 2 3 4 5 6	Enables the indoor unit with the minimum address to select AUTO mode, and switches the operation mode of the other indoor units to the same mode.	Cannot be set when the centralized control is ON.
	2	Switching the Silent/ Demand mode	Demand control	Silent mode	Can be set when OFF or during operation	<SM60> ON OFF 1 2 3 4 5 6	—	About the Silent mode/Demand control setting, refer to "8-6. OUTDOOR UNIT INPUT/OUTPUT CONNECTOR".
	3	— *5	—	—	—		—	—
	4	—	—	—	—		—	—
	5	—	—	—	—	—	—	—
	6	—	—	—	—	—	—	—

*1 SW5-7 Opens the indoor-linear expansion valve as a countermeasure against the indoor unit in FAN, COOL, STOP, or thermo-OFF operation with refrigerant-shortage status due to an accumulation of liquid refrigerant in the indoor unit.
*2 SW5-8 Countermeasure against room temperature rise for indoor unit in FAN and COOL mode.
*3 During heating operation and the ambient temperature is 39°F (4°C) or below, the freeze prevention heater is energized.
*4 During heating mode is OFF (include thermo-OFF in cooling mode), and the ambient temperature is 39°F (4°C) or below, the freeze prevention heater is energized.
*5 Use it for Model Switch. ((H)P36/48)

8-6. OUTDOOR UNIT INPUT/OUTPUT CONNECTOR

● **State (CN51)**

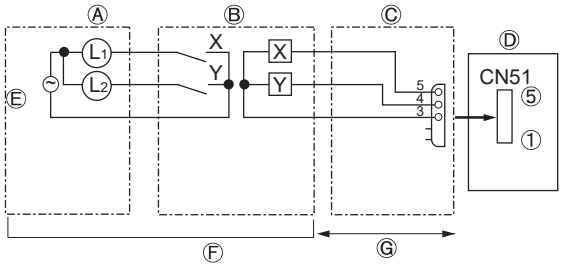

Ⓐ Distant control board
Ⓑ Relay circuit
Ⓒ External output adapter (PAC-SA88HA-E)
Ⓓ Outdoor unit control board

Ⓔ Lamp power supply
Ⓕ Procure locally
Ⓖ Max. 33 ft [10 m]

L_1: Error display lamp
L_2: Compressor operation lamp
X, Y: Relay (coil rating: ≤ 0.9 W, 12 V DC)

● **Auto change over (CN3N)**

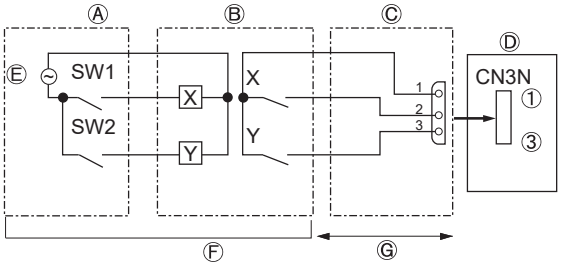

Ⓐ Remote control panel
Ⓑ Relay circuit
Ⓒ External input adapter (PAC-SC36NA-E)
Ⓓ Outdoor unit control board

Ⓔ Relay power supply
Ⓕ Procure locally
Ⓖ Max. 33 ft [10 m]

SW1: Switch
SW2: Switch
X, Y: Relay (contact rating: ≥ 0.1 A, 15 V DC)
(min. applicable load: ≤ 1 mA)

	ON	OFF
SW1	Heating	Cooling
SW2	Validity of SW1	Invalidity of SW1

● **Silent Mode/Demand Control (CN3D)**

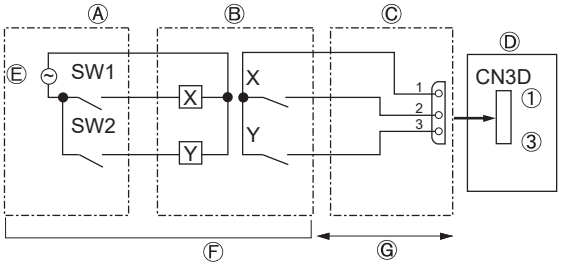

Ⓐ Remote control panel
Ⓑ Relay circuit
Ⓒ External input adapter (PAC-SC36NA-E)
Ⓓ Outdoor unit control board

Ⓔ Relay power supply
Ⓕ Procure locally
Ⓖ Max. 33 ft [10 m]

SW1: Switch
SW2: Switch
X, Y: Relay (contact rating: ≥ 0.1 A, 15 V DC)
(min. applicabl load: ≤ 1 mA)

The silent mode and the demand control are selected by switching the DIP switch 9-2 on outdoor controller board.
It is possible to set it to the following power consumption (compared with ratings) by setting SW1, 2.

	Outdoor controller board DIP SW9-2	SW1	SW2	Function
Silent mode	OFF	ON	—	Silent mode operation
Demand control	ON	OFF	OFF	100% (Normal)
		ON	OFF	75%
		ON	ON	50%
		OFF	ON	0% (Stop)

8-7. HOW TO CHECK PARTS

<table>
<tr><th>Parts name</th><th>Checkpoints</th></tr>
<tr><td>Thermistor (TH2)
<Hic pipe>
Thermistor (TH3)
<Outdoor liquid pipe>
Thermistor (TH4)
<Compressor>
Thermistor (TH6)
<Suction pipe>
Thermistor (TH7)
<Ambient>
Thermistor (TH8)
<Heat sink></td><td>Disconnect the connector then measure the resistance with a multimeter.
(At the ambient temperature 50 to 80°F [10 to 30°C]
<table>
<tr><th></th><th>Normal</th><th>Abnormal</th></tr>
<tr><td>TH4</td><td>160 to 410 kΩ</td><td rowspan="3">Open or short</td></tr>
<tr><td>TH2
TH3
TH6
TH7</td><td>4.3 to 9.6 kΩ</td></tr>
<tr><td>TH8</td><td>39 to 105 kΩ</td></tr>
</table></td></tr>
<tr><td>Fan motor (MF1, MF2)
 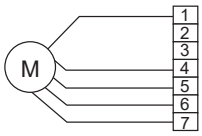
</td><td>Measure the resistance between the connector pins with a multimeter.
(At the ambient temperature 68°F [20°C])
<table>
<tr><th colspan="4">Normal</th><th>Abnormal</th><th>Model name of fan motor *</th></tr>
<tr><td>1 - 4</td><td>5 - 4</td><td>6 - 4</td><td>7 - 4</td><td rowspan="2">Open or short
(Short, for 7 - 4)</td><td rowspan="2">SIC-82XX / SIC-88XX</td></tr>
<tr><td>1.1 ± 0.05 MΩ</td><td>40 ± 4 kΩ</td><td>220 ± 22 kΩ</td><td>Open</td></tr>
<tr><td>Open</td><td>150 ± 15kΩ</td><td>55 ± 11 kΩ</td><td>Open</td><td></td><td>SIC-71XX / SIC-81XX</td></tr>
</table>
* See the spec name plate indicated in the diagram for the model name of fan motor
* Where "X" in model name of fan motor represents numbers and letters</td></tr>
<tr><td>Solenoid valve coil
<4-way valve>
(21S4)</td><td>Measure the resistance between the terminals with a multimeter.
(At the ambient temperature 68°F [20°C)
<table>
<tr><th>Normal</th><th>Abnormal</th></tr>
<tr><td>1567.5 ± 156.8Ω</td><td>Open or short</td></tr>
</table></td></tr>
<tr><td>Motor for compressor
(MC)
 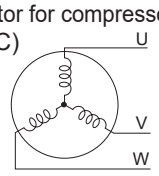
</td><td>Measure the resistance between the terminals with a multimeter.
(Winding temperature 68°F [20°C])
<table>
<tr><th>Normal</th><th>Abnormal</th></tr>
<tr><td>0.305 ± 0.015Ω</td><td>Open or short</td></tr>
</table></td></tr>
<tr><td>Solenoid valve coil
<Bypass valve>
(SV1)
<Switching valve>
(SV2)*2
*2 Only NAMHZ2 model.</td><td>Measure the resistance between the terminals with a multimeter.
(At the ambient temperature 68°F [20°C])
<table>
<tr><th>Normal</th><th>Abnormal</th></tr>
<tr><td>1197 ± 10Ω</td><td>Open or short</td></tr>
</table></td></tr>
<tr><td>Linear Expansion Valve
(LEV A)
 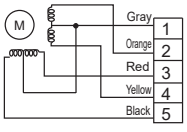
</td><td>
<table>
<tr><th colspan="4">Normal</th><th>Abnormal</th></tr>
<tr><td>Gray - Black</td><td>Gray - Red</td><td>Gray - Yellow</td><td>Gray - Orange</td><td rowspan="2">Open or short</td></tr>
<tr><td colspan="4">46 ± 3Ω</td></tr>
</table></td></tr>
<tr><td>Linear Expansion Valve
(LEV B)
 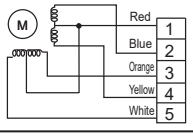
</td><td>
<table>
<tr><th colspan="4">Normal</th><th>Abnormal</th></tr>
<tr><td>Red - White</td><td>Red - Orange</td><td>Red - Yellow</td><td>Red - Blue</td><td rowspan="2">Open or short</td></tr>
<tr><td colspan="4">46 ± 4Ω</td></tr>
</table></td></tr>
</table>

Check method of DC fan motor (fan motor/outdoor multi controller circuit board)

1. Notes
   - High voltage is applied to the connecter (CNF1, 2) for the fan motor. Pay attention to the service.
   - Do not pull out the connector (CNF1, 2) for the motor with the power supply on.
     (It causes trouble of the outdoor multi controller circuit board and fan motor.)
2. Self check
   Symptom: The outdoor fan cannot rotate.

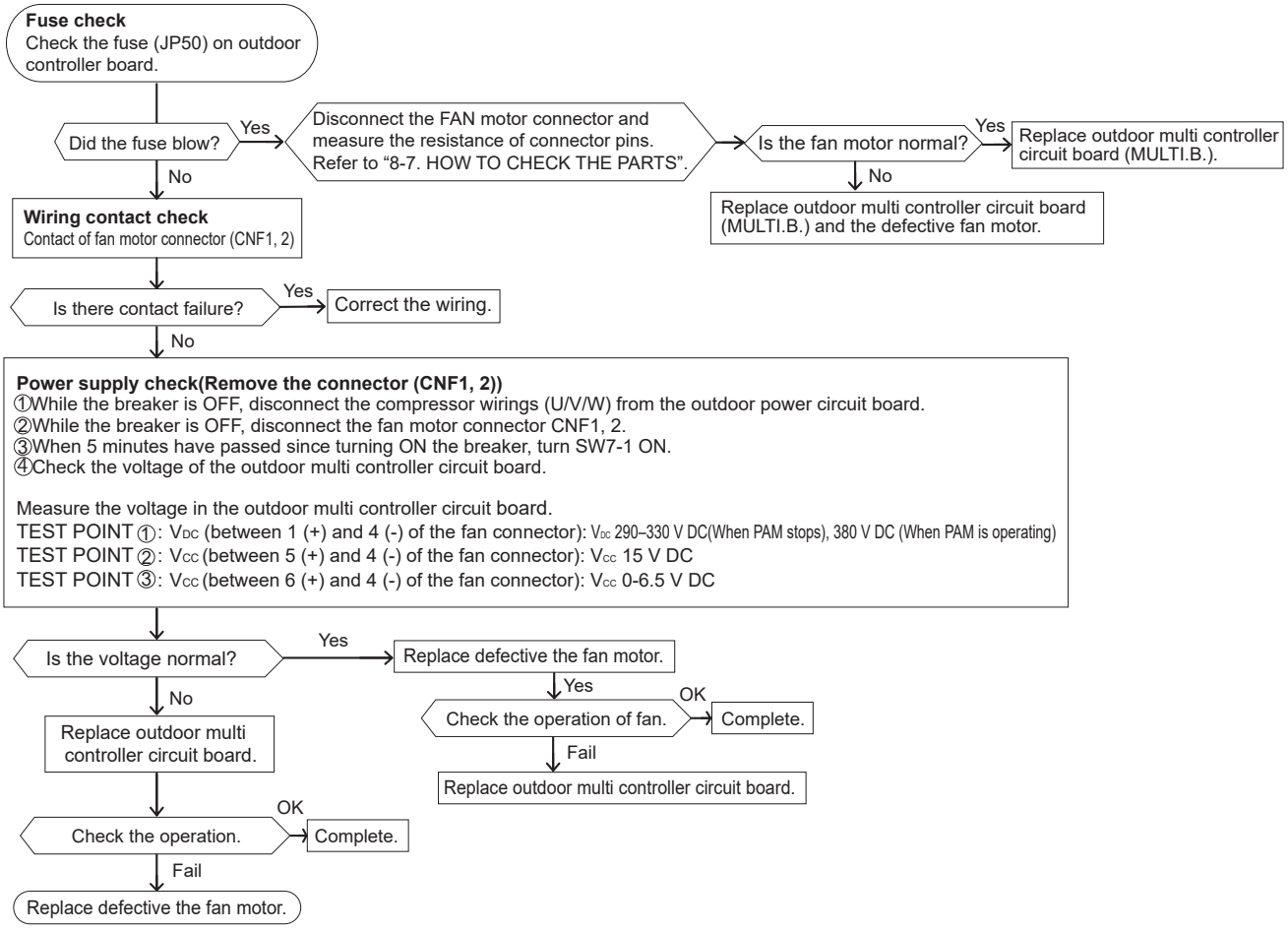

Note: Turn SW7-1 OFF after the troubleshooting completes.
The fan sometimes starts on-off cycle operation during low-load operation or cooling at low ambient temperature.
It is not abnormal; the operation ensures reliability of the product.

Check method of multi controller circuit board

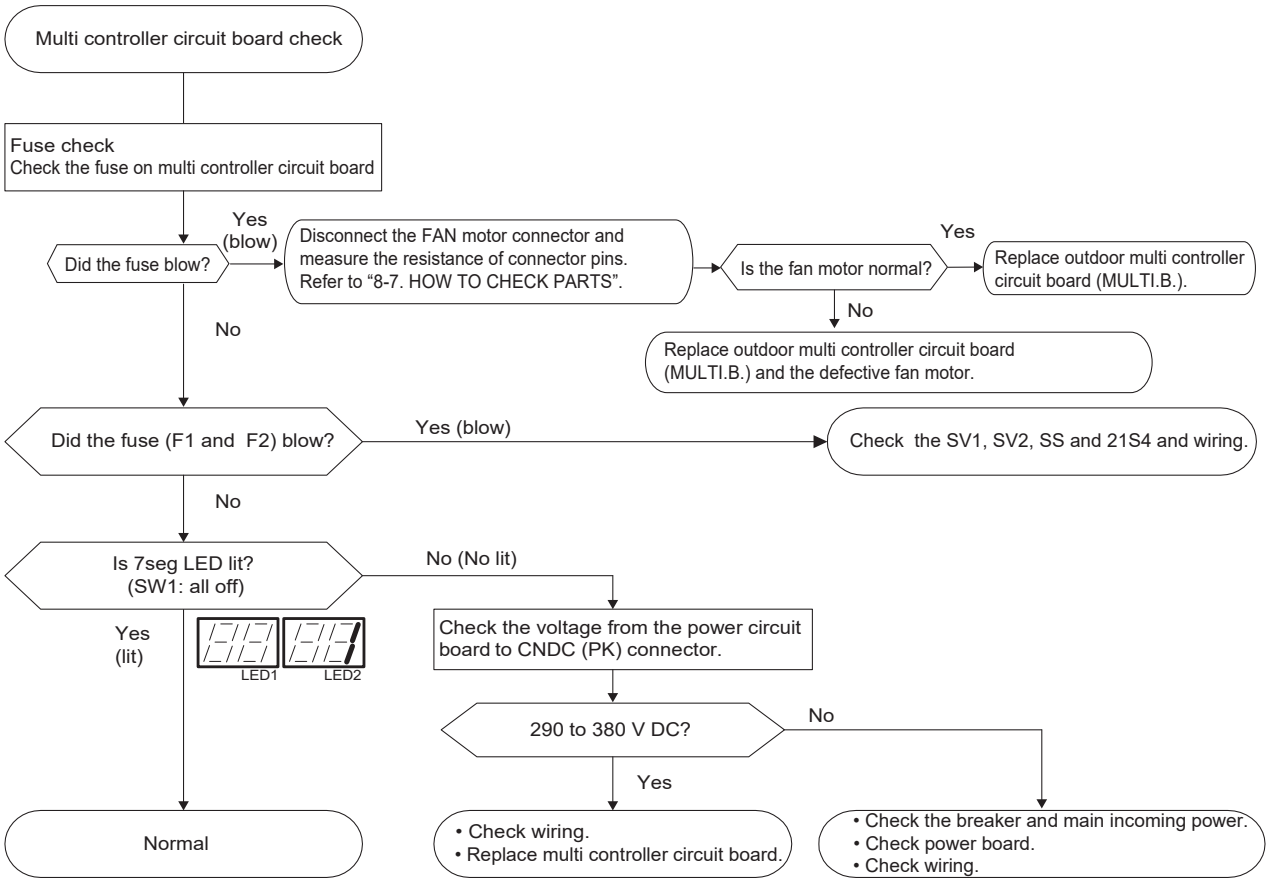

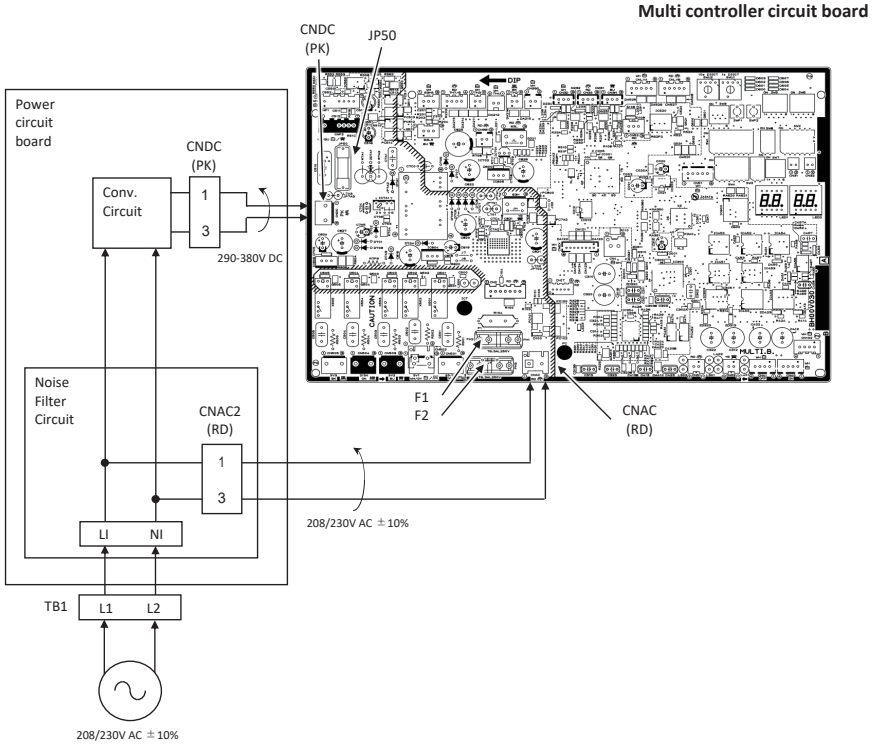

Check method of power circuit board

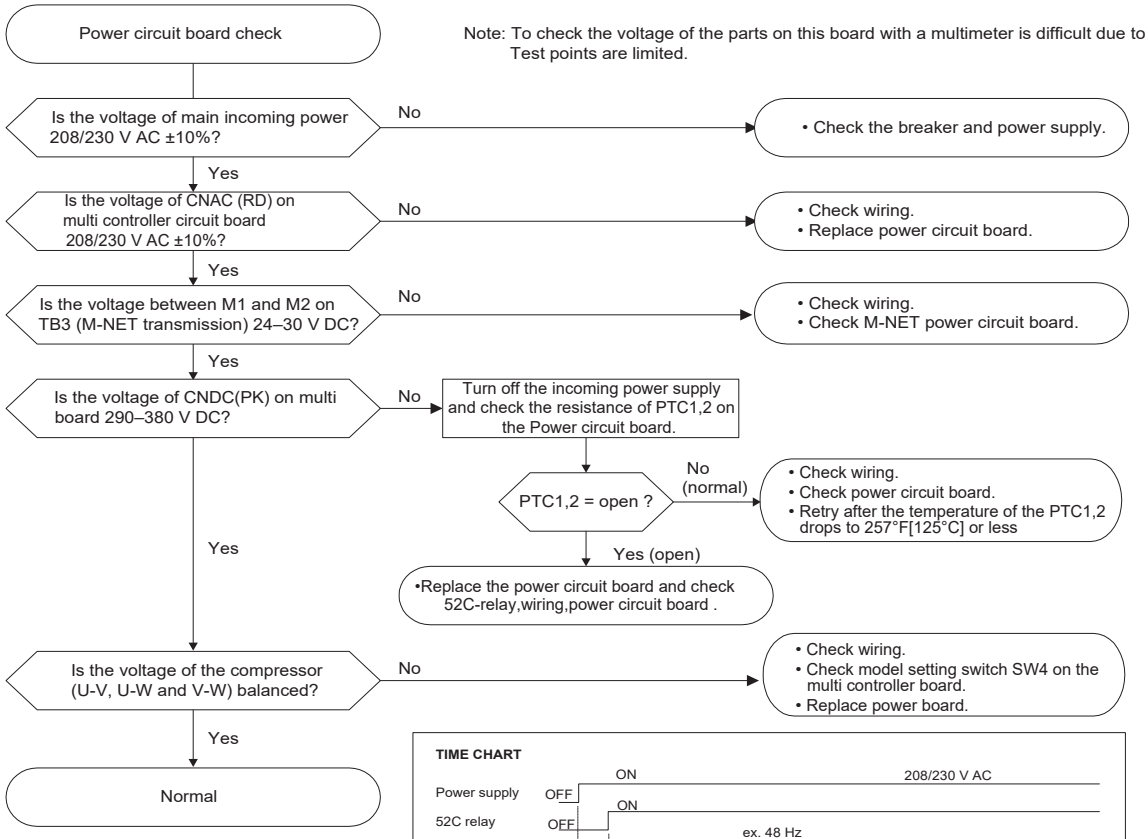

MXZ-SM60NAM2-U1
MXZ-SM36NAMHZ2-U1
MXZ-SM42NAMHZ2-U1
MXZ-SM48NAMHZ2-U1

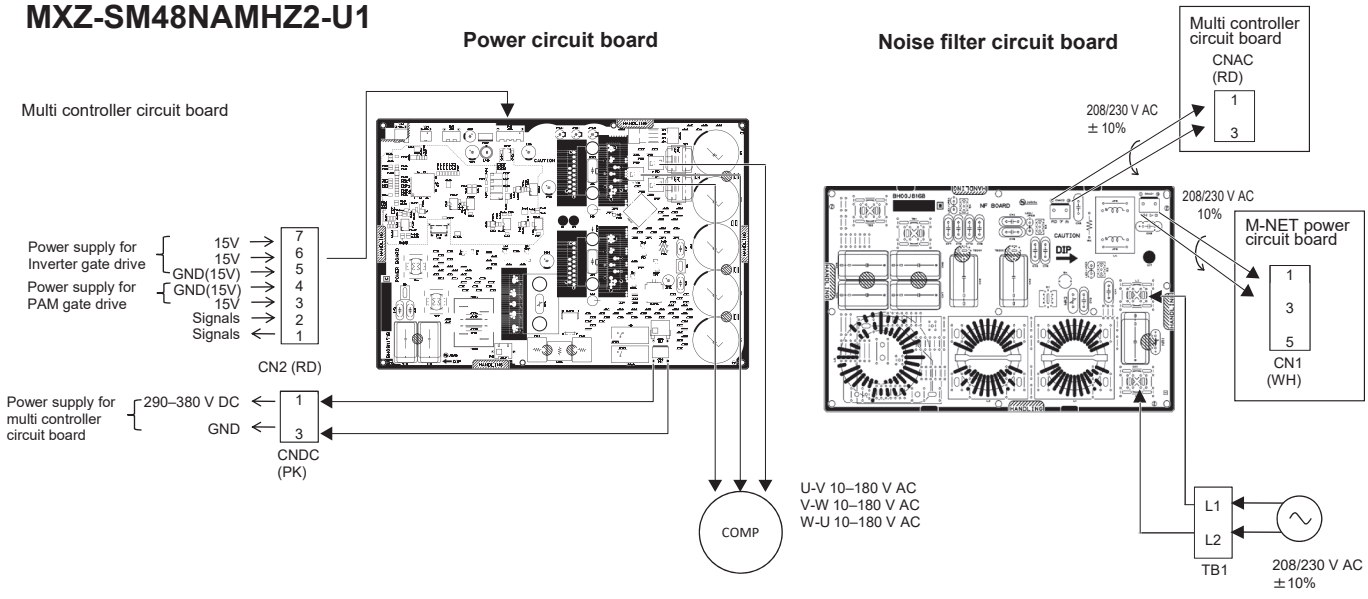

MXZ-SM36NAM2-U1
MXZ-SM48NAM2-U1

Power circuit board

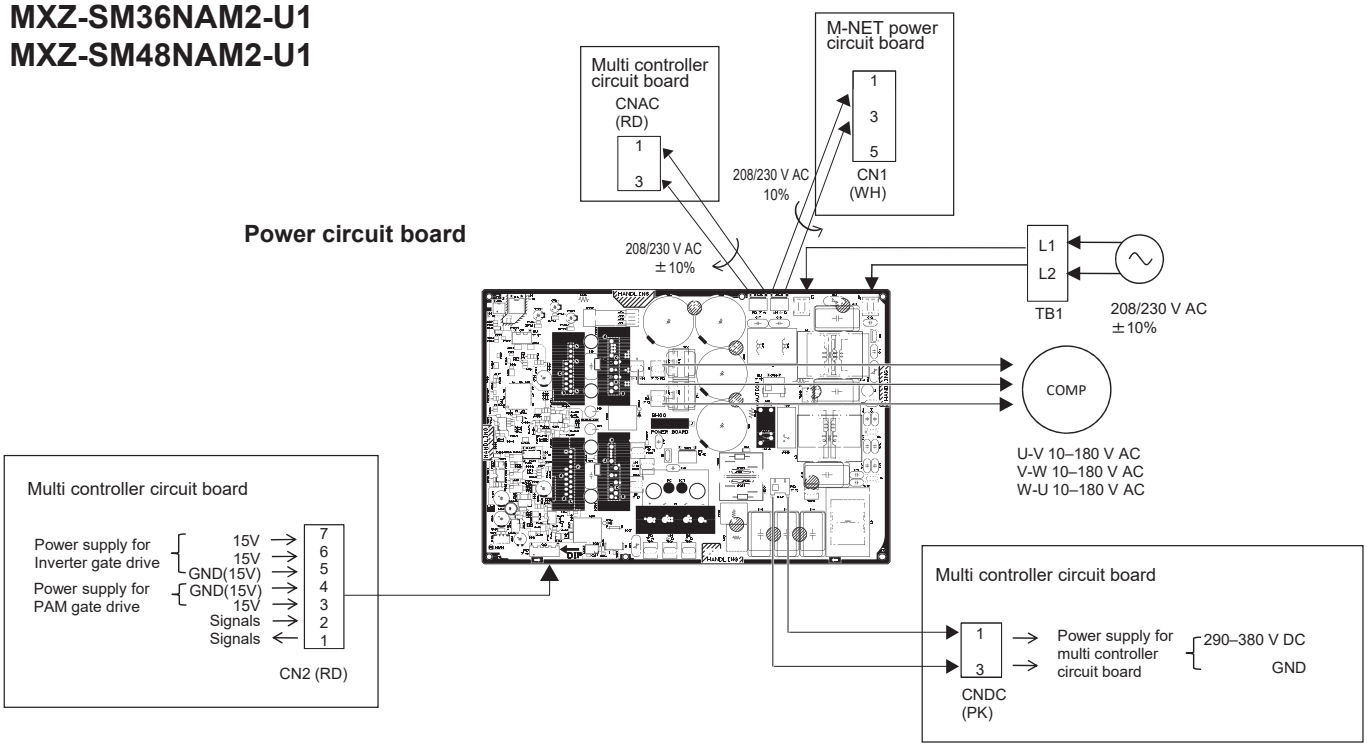

Check method of M-NET power circuit board

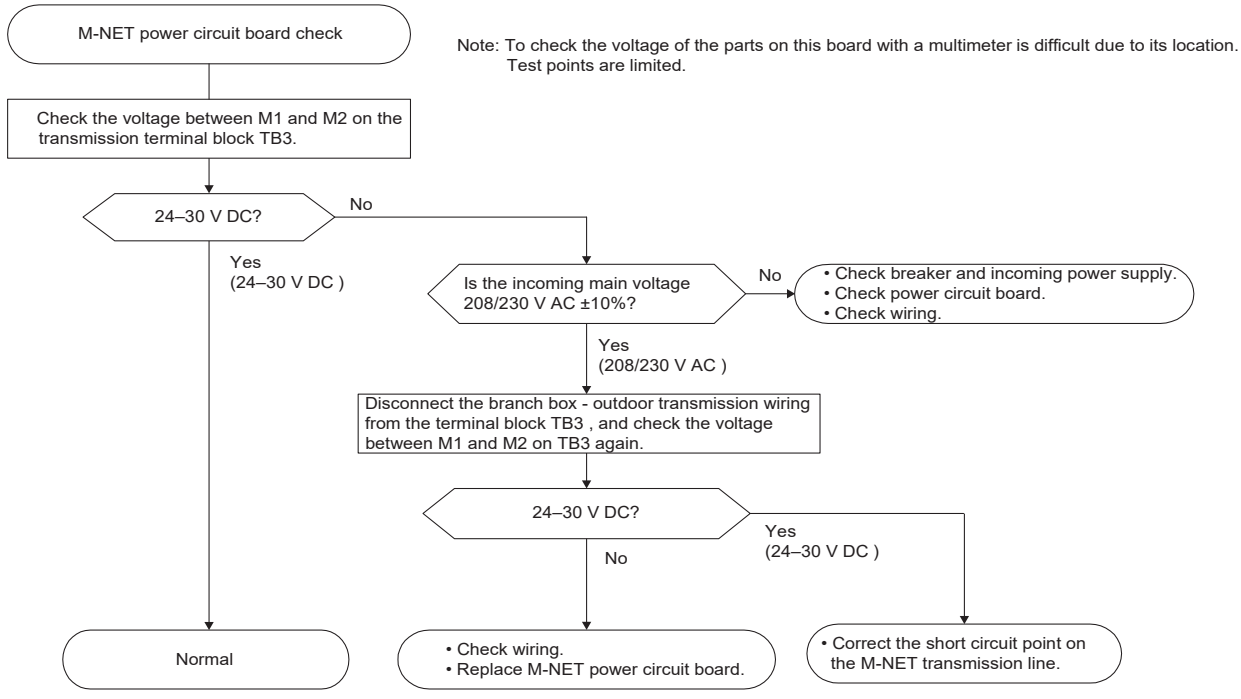

M-NET power circuit board

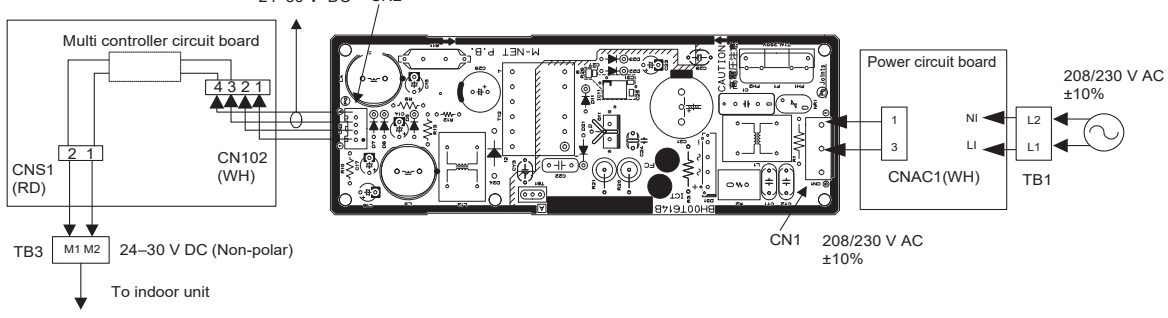

8-8. HOW TO CHECK COMPONENTS

<Thermistor feature chart>

Low temperature thermistors

- Thermistor <Hic pipe> (TH2)
- Thermistor <Outdoor liquid pipe> (TH3)
- Thermistor <Suction pipe> (TH6)
- Thermistor <Ambient> (TH7)

Thermistor R0 = 15 kΩ ± 3 %
B constant = 3480 ± 1 %

$$R_t = 15\exp\{3480(\frac{1}{273+t} - \frac{1}{273})\}$$

32°F [0°C]	15 kΩ	86°F [30°C]	4.3 kΩ
50°F [10°C]	9.6 kΩ	104°F [40°C]	3.0 kΩ
68°F [20°C]	6.3 kΩ		
77°F [25°C]	5.2 kΩ		

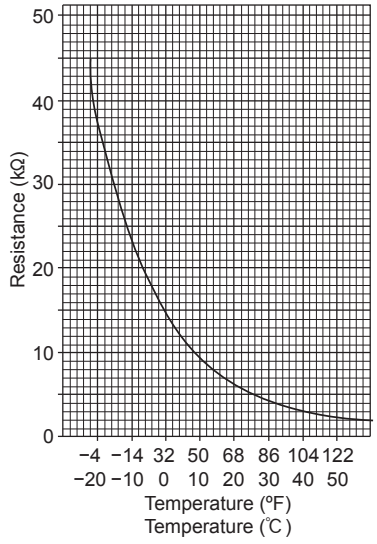

Medium temperature thermistor

- Thermistor <Heat sink> (TH8)

Thermistor R50 = 17 kΩ ± 2 %
B constant = 4150 ± 3 %

$$R_t = 17\exp\{4150(\frac{1}{273+t} - \frac{1}{323})\}$$

0 °C	180 kΩ
25 °C	50 kΩ
50 °C	17 kΩ
70 °C	8 kΩ
90 °C	4 kΩ

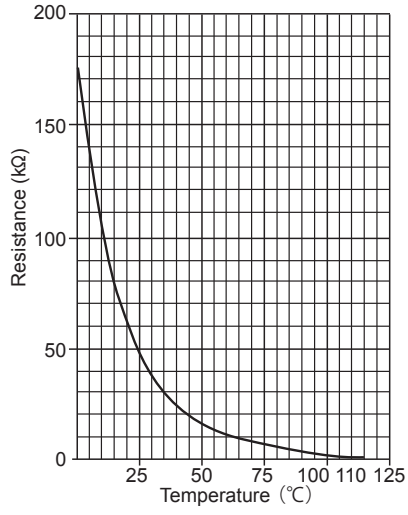

High temperature thermistor

- Thermistor <Compressor> (TH4)

Thermistor R120 = 7.465 kΩ ± 2 %
B constant = 4057 ± 2 %

$$R_t = 7.465\exp\{4057(\frac{1}{273+t} - \frac{1}{393})\}$$

68°F [20°C]	250 kΩ	158°F [70°C]	34 kΩ
86°F [30°C]	160 kΩ	176°F [80°C]	24 kΩ
104°F [40°C]	104 kΩ	194°F [90°C]	17.5 kΩ
122°F [50°C]	70 kΩ	212°F [100°C]	13.0 kΩ
140°F [60°C]	48 kΩ	230°F [110°C]	9.8 kΩ

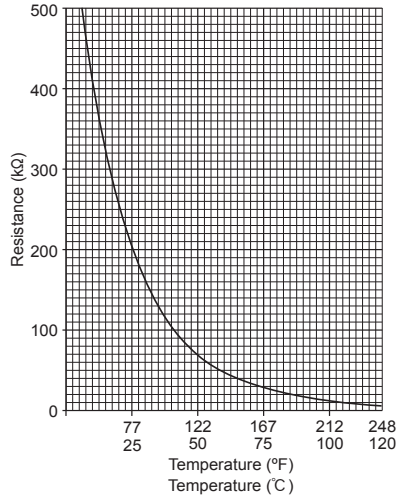

<LOW PRESSURE SENSOR>

• Comparing the Low Pressure Sensor Measurement and Gauge Pressure

By configuring the digital display setting switch (SW1) as shown in the figure below, the pressure as measured by the low pressure sensor appears on the LED1 on the control board.

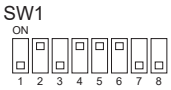

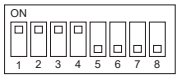

The figure at left shows that the switches 1 through 4 are set to ON and 5 through 8 are set to OFF.

(1) While the outdoor unit is stopped, compare the gauge pressure and the pressure displayed on self-diagnosis LED1, 2.

1) When the gauge pressure is between 0 and 14 PSIG [0.098 MPaG], internal pressure is caused due to gas leak.
2) When the pressure displayed on self-diagnosis LED1, 2 is between 0 and 14 PSIG [0.098 MPaG], the connector may be defective or be disconnected. Check the connector and go to (4).
3) When the outdoor temperature is 86°F [30°C] or less, and the pressure displayed on self-diagnosis LED1, 2 exceeds 247 PSIG [1.7 MPaG], go to (3).
   When the outdoor temperature exceeds 86°F [30°C], and the pressure displayed on self-diagnosis LED1, 2 exceeds 247 PSIG [1.7 MPaG], go to (5).
4) If other than 1), 2) or 3), compare the pressures while the sensor is running. Go to (2).

(2) Compare the gauge pressure and the pressure displayed on self-diagnosis LED1, 2 after 15 minutes have passed since the start of operation. (Compare them by PSIG [MPaG] unit.)

1) When the difference between both pressures is within 29 PSIG [0.2MPaG], both the low pressure sensor and the control board are normal.
2) When the difference between both pressures exceeds 29 PSIG [0.2MPaG], the low pressure sensor has a problem. (performance deterioration)
3) When the pressure displayed on the self-diagnosis LED1, 2 does not change, the low pressure sensor has a problem.

(3) Remove the low pressure sensor from the control board to check the pressure with the self-diagnosis LED1, 2 display.

1) When the pressure displayed on the self-diagnosis LED1,2 is between 0 and 14 PSIG [0.098 MPaG], the low pressure sensor has a problem.
2) When the pressure displayed on self-diagnosis LED1, 2 is approximately 247 PSIG [1.7 MPaG], the control board has a problem.

(4) Remove the low pressure sensor from the control board, and short-circuit between the pin 2 and pin 3 connectors (63LS) to check the pressure with the self-diagnosis LED1, 2.

1) When the pressure displayed on the self-diagnosis LED1, 2 exceeds 247 PSIG [1.7 MPaG], the low pressure sensor has a problem.
2) If other than 1), the control board has a problem.

(5) Remove the high pressure sensor (63HS) from the control board, and insert it into the connector for the low pressure sensor (63LS) to check the pressure with the self-diagnosis LED1, 2.

1) When the pressure displayed on the self-diagnosis LED1, 2 exceeds 247 PSIG [1.7 MPaG], the control board has a problem.
2) If other than 1), go to (2).

• Low Pressure Sensor Configuration (63LS)

The low pressure sensor consists of the circuit shown in the figure below. If 5 V DC is applied between the red and the black wires, voltage corresponding to the pressure between the white and the black wires will be output, and the value of this voltage will be converted by the microcomputer. The output voltage is 0.173 V per 14 PSIG [0.098 MPaG].

Note:
The pressure sensor on the body side is designed to connect to the connector. The connector pin number on the body side is different from that on the control board side.

	Body side	Control board side
Vcc	Pin 1	Pin 3
Vout	Pin 2	Pin 2
GND	Pin 3	Pin 1

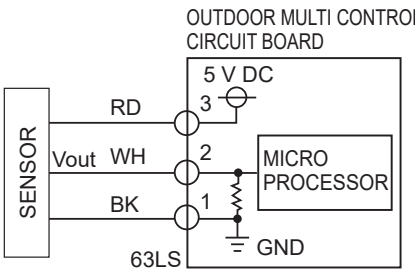

③–① : 5 V (DC)
②–① : Output Vout (DC)

Pressure: 0–247 PSIG [1.7 MPaG]
Vout: 0.5–3.5 V
0.173 V/14 PSIG [0.098 MPaG]

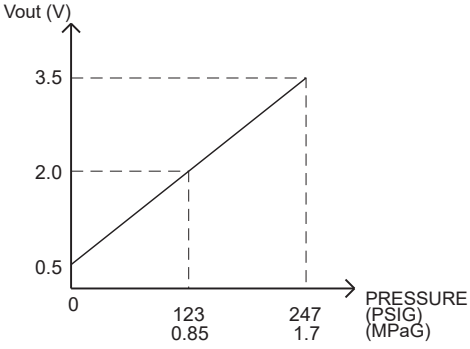

<HIGH PRESSURE SENSOR>

• Comparing the High Pressure Sensor Measurement and Gauge Pressure

By configuring the digital display setting switch (SW1) as shown in the figure below, the pressure as measured by the high pressure sensor appears on the LED1, 2 on the control board.

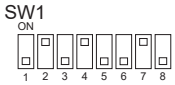

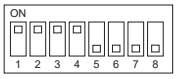

The figure at left shows that the switches 1 through 4 are set to ON and 5 through 8 are set to OFF.

(1) While the outdoor unit is stopped, compare the gauge pressure and the pressure displayed on self-diagnosis LED1, 2.

1) When the gauge pressure is between 0 and 14 PSIG [0.098 MPaG], internal pressure is caused due to gas leak.
2) When the pressure displayed on self-diagnosis LED1, 2 is between 14 PSIG [0.098 MPaG], the connector may be defective or be disconnected. Check the connector and go to (4).
3) When the pressure displayed on self-diagnosis LED1, 2 exceeds 725 PSIG [5.0 MPaG], go to (3).
4) If other than 1), 2) or 3), compare the pressures while the sensor is running. Go to (2).

(2) Compare the gauge pressure and the pressure displayed on self-diagnosis LED1,2 after 15 minutes have passed since the start of operation. (Compare them by PSIG [MPaG] unit.)

1) When the difference between both pressures is within 36 PSIG [0.25 MPaG], both the high pressure sensor and the control board are normal.
2) When the difference between both pressures exceeds 36 PSIG [0.25 MPaG], the high pressure sensor has a problem. (performance deterioration)
3) When the pressure displayed on self-diagnosis LED1, 2 does not change, the high pressure sensor has a problem.

(3) Remove the high pressure sensor from the control board to check the pressure on the self-diagnosis LED1, 2.

1) When the pressure displayed on self-diagnosis LED1, 2 is between 0 and 14 PSIG [0.098 MPaG], the high pressure sensor has a problem.
2) When the pressure displayed on self-diagnosis LED1, 2 is approximately 725 PSIG [5.0 MPaG], the control board has a problem.

(4) Remove the high pressure sensor from the control board, and short-circuit between the pin 2 and pin 3 connectors (63HS) to check the pressure with self-diagnosis LED1, 2.

1) When the pressure displayed on the self-diagnosis LED1, 2 exceeds 725 PSIG [5.0 MPaG], the high pressure sensor has a problem.
2) If other than 1), the control board has a problem.

• High Pressure Sensor Configuration (63HS)

The high pressure sensor consists of the circuit shown in the figure below. If 5 V DC is applied between the white and the black wires, voltage corresponding to the pressure between the blue and the black wires will be output, and the value of this voltage will be converted by the microcomputer. The output voltage is 0.078 V per 14 PSIG [0.098 MPaG].

Note:
The pressure sensor on the body side is designed to connect to the connector. The connector pin number on the body side is different from that on the control board side.

	Body side	Control board side
Vcc	Pin 1	Pin 3
Vout	Pin 2	Pin 2
GND	Pin 3	Pin 1

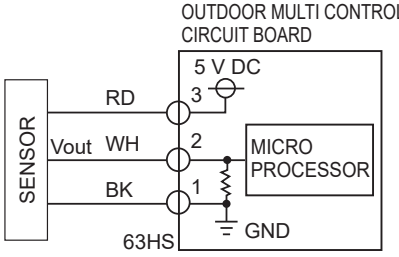

③–① : 5 V (DC)
②–① : Output Vout (DC)

Pressure: 0–725 PSIG [5.0 MPaG]
Vout: 0.5–4.5 V
0.078 V/14 PSIG [0.098 MPaG]

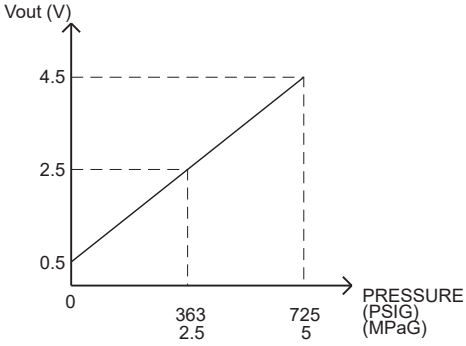

8-9. TEST POINT DIAGRAM
Outdoor multi controller circuit board

<CAUTION> TEST POINT ① is high voltage.

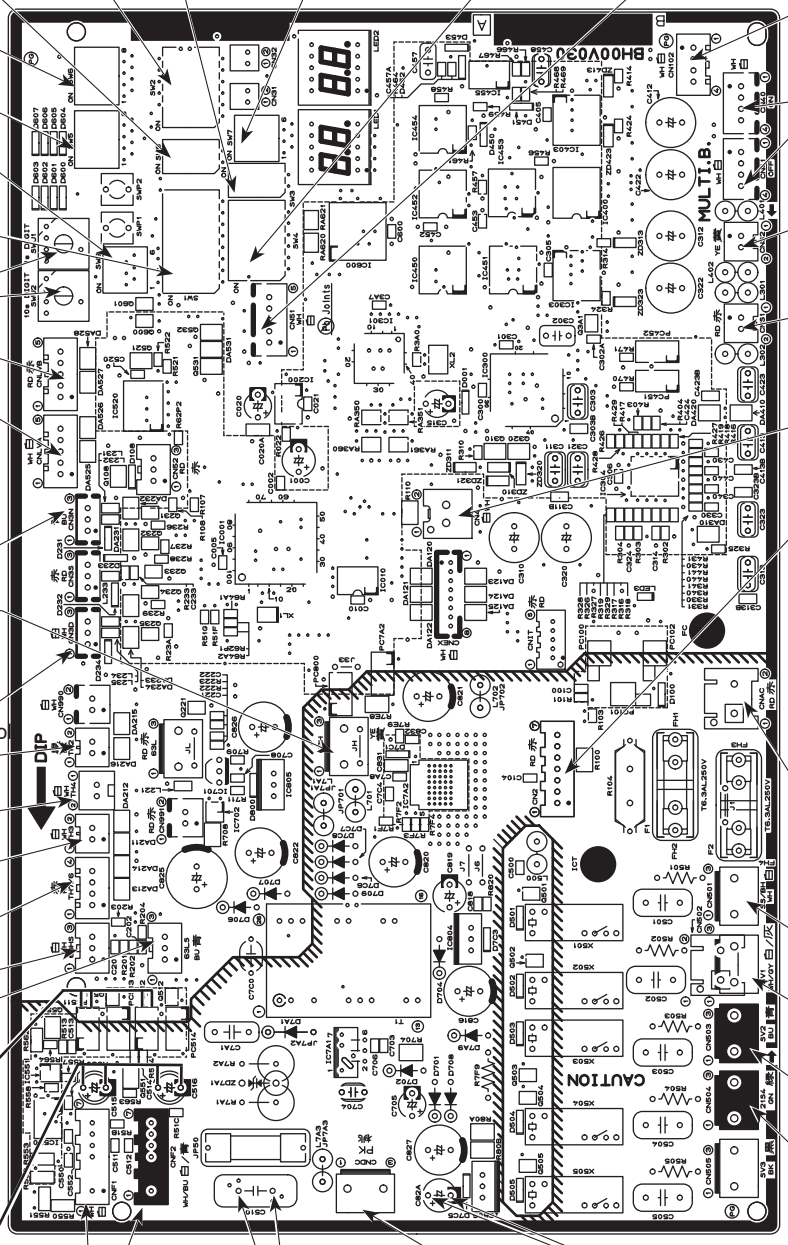

SW8
Model selection

SW2
Pump down

SW3
Test run

SW7
Manual defrost

SW4
Model selection

CN51
External signal output

SW6
Function selection

SW5
Function selection

SW9
Function selection/
Model selection

SW1
Display selection
(Self diagnosis)

SWU2, SWU1
Address setting

CNLVB
Linear expansion valve

CNLVA
Linear expansion valve

CN3N
Auto change over

63H
High pressure switch

CN3D
Input of silent demand control

TH2 Thermistor
<Hic pipe>

TH4 Thermistor
<Compressor>

TH3 Thermistor
<Outdoor liquid pipe>

TH7/TH6 Thermistor
<Ambient/ Suction pipe>

63HS
High pressure sensor

63LS
Low pressure sensor

V_{FG} (TEST POINT④)
(Voltage between pin3 and pin4 of PC511 or PC512):
(Correspond to CNF1,2 ⑦(+)–④(−))

CN102
Connect to the M-P.B (CN2)
(M-NET power circuit board)

CN40,CN41
Centralized control power supply/ For storing jumper connector selection

CNS2
Transmission wire of centralized control

CNS1
Branch box/ indoor unit /outdoor unit
connecting wire

CN4
Connect to the outdoor power circuit board (CN4)

CN2
Connect to the outdoor power circuit board (CN2)
①–⑤:
Power circuit board →
Transmitting signal to the multi controller board
(0–5 V DC)
②–⑤: Zero cross signal
(0–5 V DC)
③–④: 15 V DC
⑥–⑤: 15 V DC
⑦–⑤: 15 V DC

CNAC
Power supply for multi controller circuit board
(CNAC2)
208/230 V AC

SS/BH
Base heater

SV1
Bypass valve

SV2
Switching valve
(Only NAHZ2 model)

21S4
4-way valve

V_{SP}
(Voltage between pins of C515 and C516):
0 V DC (when stopped)
1–6.5 V DC (when operated)
(Same as CNF1,2 ⑥(+)–④(−))

CNF1, 2
Connect to fan motors
①–④: 290V–380 V DC
⑤–④: 15 V DC
⑥–④: 0–6.5 V DC
⑦–④: 15 V DC(when stopped)
0–15 V DC pulse
(when operated)

V_{DC} (TEST POINT①)
(Voltage between pins of C510)
: 290V–380 V DC
(Same as CNF1,2 ①(+)–④(−))

CNDC
290V–380 V DC
(①(+)–③(−))
Connect to the outdoor
power circuit board
(CNDC)

V_{CC} (TEST POINT②)
(Voltage between pins of C82A): 15 V DC
(Same as CNF1,2 ⑤(+)–④(−))

Outdoor power circuit board

MXZ-SM60NAM2-U1
MXZ-SM36NAMHZ2-U1
MXZ-SM42NAMHZ2-U1
MXZ-SM48NAMHZ2-U1

Brief Check of POWER MODULE
If they are short-circuited, it means that they are broken.
Measure the resistance in the following points (connectors, etc.).

1. Check of POWER MODULE
   ① Check of DIODE circuit
   R - L1 , S - L1 , R - N1 , S - N1
   ② Check of IGBT circuit
   L2 - N1
   ③ Check of INVERTER circuit
   P - U , P - V , P - W , N1 - U , N1 - V , N1 - W

Note: The marks R , S , L1 , L2 , P , N1 , U , V and W shown in the diagram are not actually printed on the board.

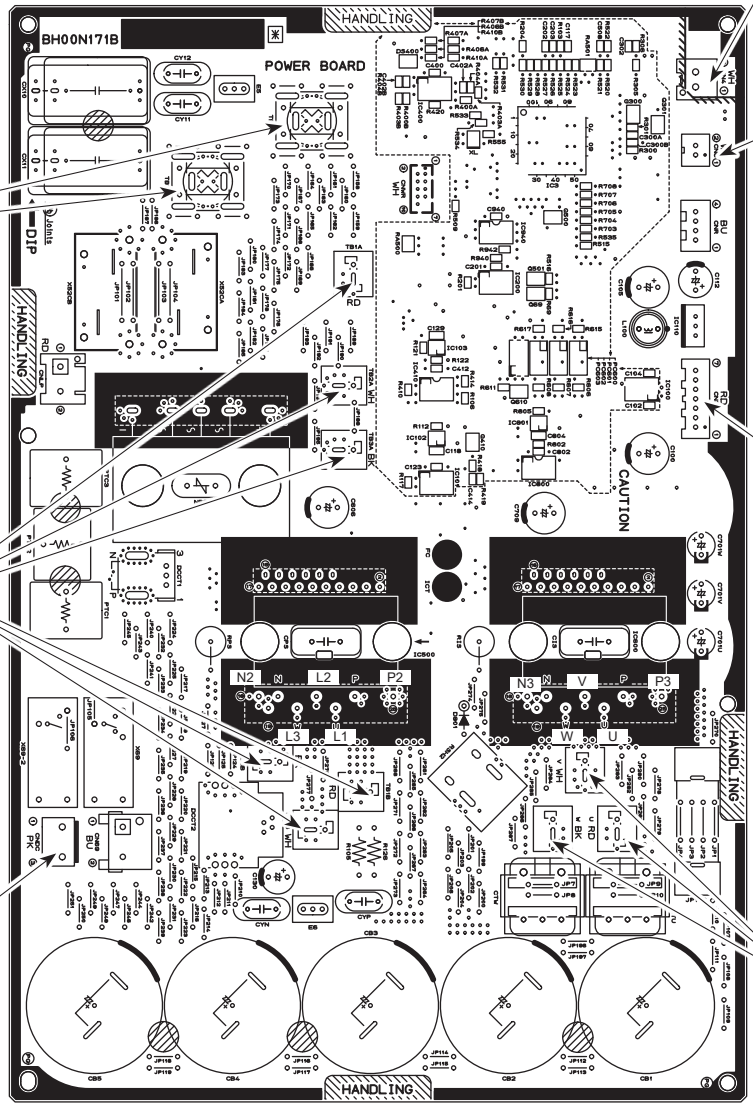

CN4
Connect to the outdoor multi controller circuit board (CN4)

CN6
Thermistor (TH8)

TB3, TB4
Voltage of 208/230 V AC is input
(Connect to the outdoor noise filter board (TB1, TB2)) M6 2.8±0.2 N·m

TB1A, TB2A, TB3A, TB1B, TB2B, TB3B
Connect to DCL

CN2
Connect to the outdoor multi controller circuit board (CN2)
①–⑤: Transmitting signal to outdoor controller circuit board ((0–5 V DC)
②–⑤: Zero cross signal (0–5 V DC)
③–④: 15 V DC
⑥–⑤: 15 V DC
⑦–⑤: 15 V DC

CNDC
290–380 V DC (①+, ②–)
Connect to the outdoor multi controller circuit board (CNDC)

TB-U, TB-V, TB-W
Connect to the compressor (MC)
Voltage among phases: 10-180 V AC

Outdoor power circuit board

MXZ-SM36NAM2-U1
MXZ-SM48NAM2-U1

Brief Check of POWER MODULE
If they are short-circuited, it means that they are broken.
Measure the resistance in the following points (connectors, etc.).

1. Check of POWER MODULE
   ① Check of DIODE circuit
   R - P1 S - P1 R - N1 S - N1
   ② Check of IGBT circuit
   P2 - L1 P2 - L2 N2 - L1 N2 - L2
   ③ Check of INVERTER circuit
   P3 - U , P3 - V , P3 - W , N3 - U , N3 - V , N3 - W

Note: The marks R , S , L1 , L2 , P1 , N1 , U , V and W shown in the diagram are not actually printed on the board.

CN2
Connect to the outdoor multi controller circuit board (CN2)
①–⑤: Transmitting signal to outdoor controller circuit board ((0–5 V DC)
②–⑤: Zero cross signal (0–5 V DC)
③–④: 15 V DC
⑥–⑤: 15 V DC
⑦–⑤: 15 V DC

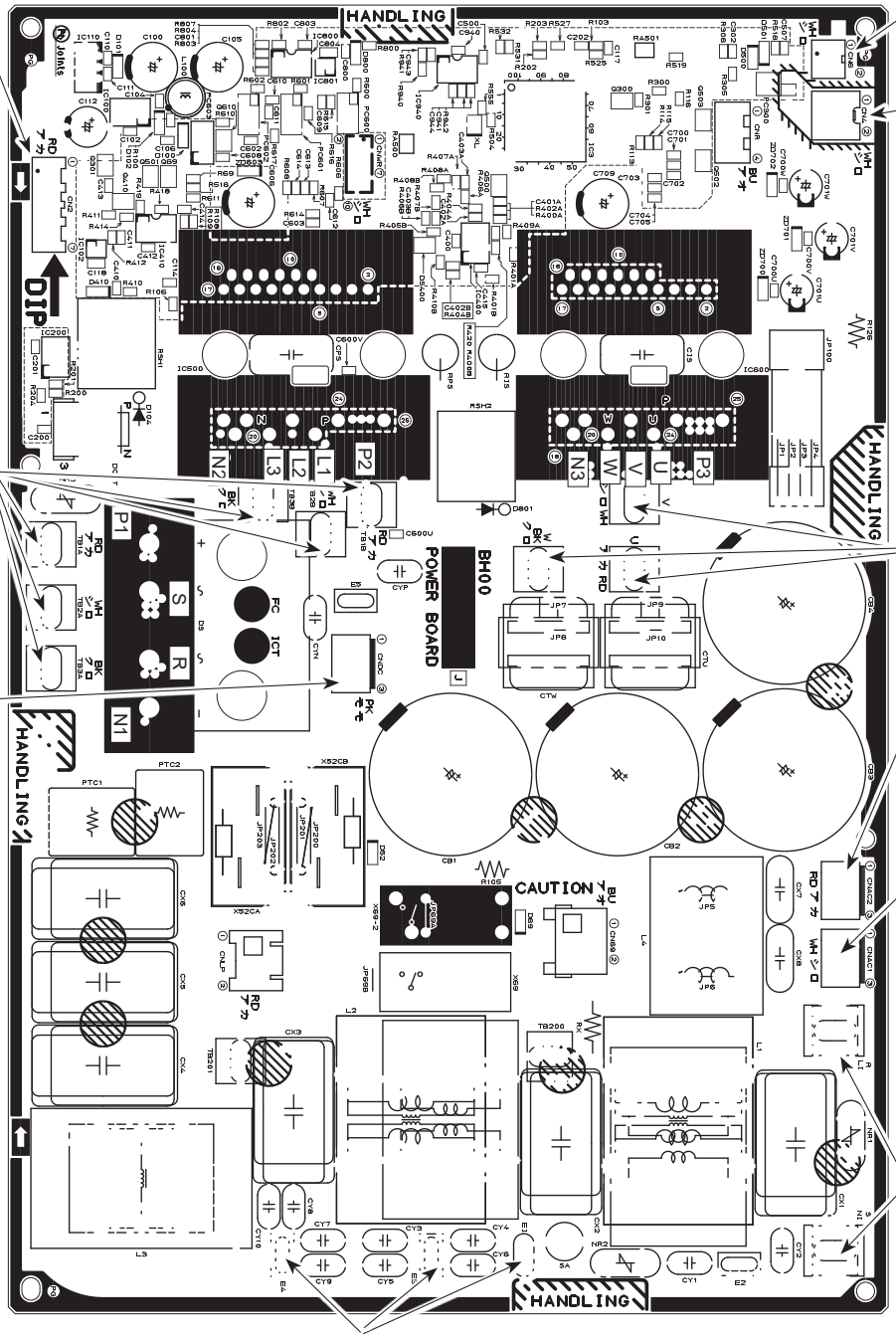

CN6
Thermistor (TH8)

CN4
Connect to the outdoor multi controller circuit board (CN4)

TB1B, TB3B, TB2B, TB1A, TB2A, TB3A
Connect to DCL

U/V/W
Connect to the compressor (MC) Voltage among phases: 10–180 V AC

CNDC
290–380 V DC (①+, ③–)
Connect to the outdoor controller circuit board (CNDC)

CNAC2
208/230 V AC
Connect to the outdoor multi controller circuit board (CNAC)

CNAC1
208/230 V AC
Connect to the M-NET power circuit board (CN1)

R/LI, S/NI
Voltage of 208/230 V AC is input (Connect to the terminal block (TB1))

EI, E3, E4
Connect to the electrical parts box

Outdoor noise filter circuit board

MXZ-SM60NAM2-U1
MXZ-SM36NAMHZ2-U1
MXZ-SM42NAMHZ2-U1
MXZ-SM48NAMHZ2-U1

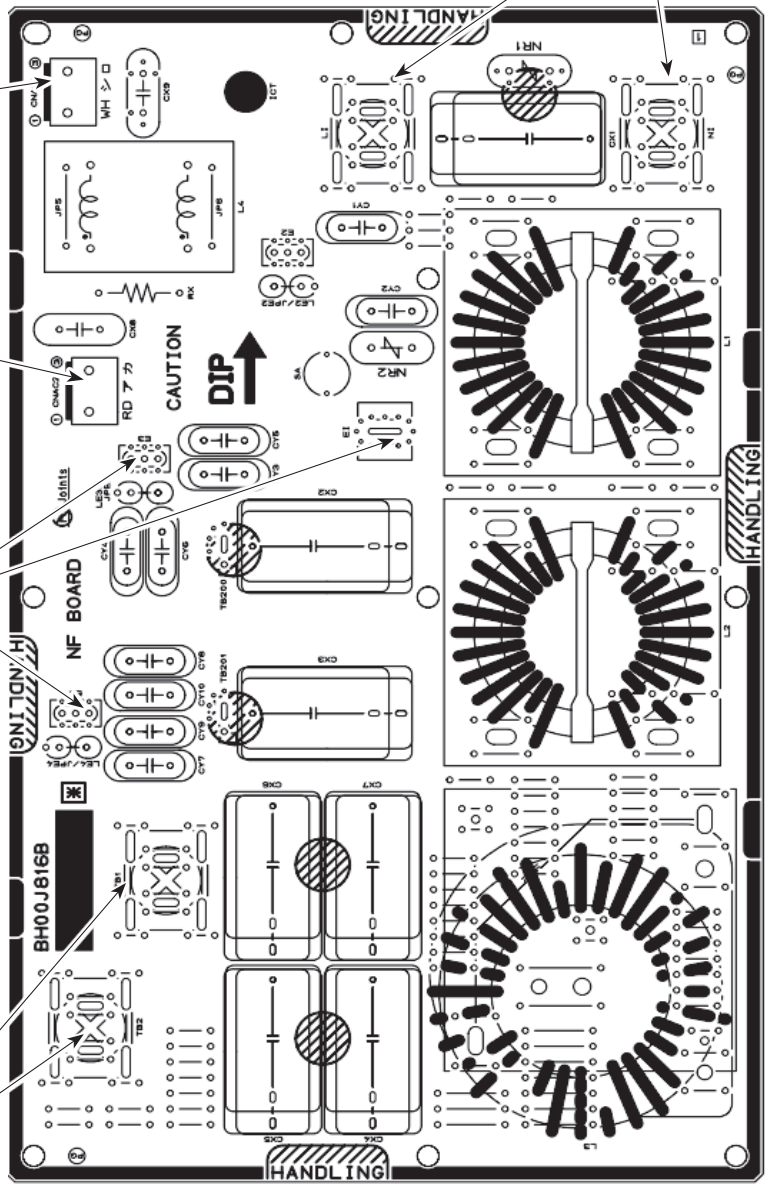

M-NET power circuit board

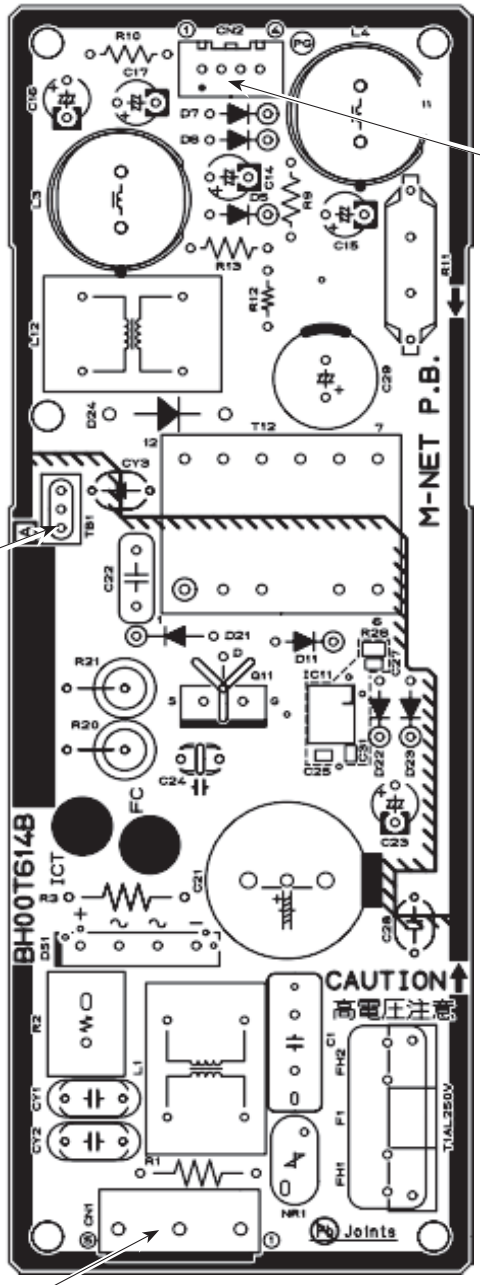

CN2
Connect to the outdoor multi controller circuit board (CN102)
– : 24–30 V DC
– : 24–30 V DC

TB1
Connect to the electrical parts box

CN1
Connect to the outdoor power circuit board (CNAC1)
①–③: 208/230 V AC

SW: setting
0....OFF
1....ON

No.	SW1 setting 12345678	Display mode	Display on the LED1, 2 (display data) 1	2	3	4	5	6	7	8	Notes
0	00000000	Relay output display	Compressor operation	52C	21S4	SV1	(SV2)			Always lighting	ON: light on OFF: light off
		Check display	0000–9999 (Alternating display of addresses and check code)								•When abnormality occurs, check display.
1	10000000	Indoor unit check status	No.1 unit check	No.2 unit check	No.3 unit check	No.4 unit check	No.5 unit check	No.6 unit check	No.7 unit check	No.8 unit check	Light on at time of abnormality
2	01000000	Protection input	High pressure abnormality	Superheat due to low discharge temperature	Compressor shell temperature abnormality	TH4 abnormality	TH3 abnormality	Outdoor fan rotation frequency abnormality	TH7 abnormality	TH8 abnormality	Display detected microprocessor protection or abnormality
3	11000000	Protection input	Heat sink overheating	Compressor over current interception	Voltage abnormality	Insufficient refrigerant amount abnormality	Current sensor/ primary current abnormality	63LS abnormality	63HS abnormality	start over current interception abnormality delay	
4	00100000	Protection input	Abnormality in the number of indoor units	Address double setting abnormality	Indoor unit capacity error	Over capacity	Indoor unit address error	Outdoor unit address error	Current sensor open/short	serial communication abnormality (outdoor unit)	
5	10100000	Abnormality delay display 1	High pressure abnormality delay	Superheat due to low discharge temperature delay	Compressor shell temperature abnormality delay	TH4 abnormality delay	TH3 abnormality delay	Outdoor fan rotation frequency abnormality delay	TH7 abnormality delay	TH8 abnormality delay	Display all abnormalities remaining in abnormality delay
6	01100000	Abnormality delay display 2	Heat sink overheating delay	Compressor over current interception delay	Voltage abnormality delay	Insufficient refrigerant amount abnormality delay	Current sensor/ primary current abnormality delay	63LS abnormality delay	63HS abnormality delay	start over current interception abnormality delay	
7	11100000	Abnormality delay display 3	63LS abnormality delay	TH2 abnormality delay	4-way valve abnormality delay	Delay caused by blocked valve in cooling mode	Power module abnormality delay	TH6 abnormality delay	Current sensor open/short delay		
8	00010000	Abnormality delay history 1	High pressure abnormality delay	Superheat due to low discharge temperature delay	Compressor shell temperature abnormality delay	TH4 abnormality delay	TH3 abnormality delay	Outdoor fan rotation frequency abnormality delay	TH7 abnormality delay	TH8 abnormality delay	Display all abnormalities remaining in abnormality delay
9	10010000	Abnormality delay history 2	Heat sink overheating delay	Compressor over current interception delay	Voltage abnormality delay	Insufficient refrigerant amount abnormality delay	Current sensor/ primary current abnormality delay	63LS abnormality delay	63HS abnormality delay	start over current interception abnormality delay	
10	01010000	Abnormality delay history 3	63LS abnormality delay	TH2 abnormality delay	4-way valve abnormality delay	Delay caused by blocked valve in cooling mode	Power module abnormality delay	TH6 abnormality delay	Current sensor open/short delay		
11	11010000	Abnormality code history 1 (the latest)	Alternating display of addresses 0000–9999 and abnormality code (including abnormality delay code)								• Display abnormalities up to present (including abnormality terminals) • History record in 1 is the latest; records become older in sequence; history record in 10 is the oldest.
12	00110000	Abnormality code history 2									
13	10110000	Abnormality code history 3									
14	01110000	Abnormality code history 4									
15	11110000	Abnormality code history 5									
16	00001000	Abnormality code history 6									
17	10001000	Abnormality code history 7									
18	01001000	Abnormality code history 8									
19	11001000	Abnormality code history 9									
20	00101000	Abnormality code history 10 (the oldest)									
21	10101000	Cumulative time	0–9999 (unit: 1 hour)								Display of cumulative compressor operating time
22	01101000	Cumulative time	0–9999 (unit: 10 hour)								
23	11101000	Outdoor unit operation display	Compressor energizing	Compressor operating prohibition	Compressor in operation	Abnormality detection					Light ON/Light OFF
24	00011000	Indoor unit operation mode	No.1 unit mode	No.2 unit mode	No.3 unit mode	No.4 unit mode	No.5 unit mode	No.6 unit mode	No.7 unit mode	No.8 unit mode	Cooling : light on, Heating: light blinking Stop fan: light off
25	10011000	Indoor unit operation display	No.1 unit operation	No.2 unit operation	No.3 unit operation	No.4 unit operation	No.5 unit operation	No.6 unit operation	No.7 unit operation	No.8 unit operation	Thermo ON : light on Thermo OFF : light off

Delay code	Abnormality delay	Delay code	Abnormality delay
1202	Discharge/Comp. temperature	1600	Discharge superheat (SHd)
	Thermistor <Compressor>(TH4)		Over charge refrigerant
1205	Thermistor <Outdoor liquid pipe> (TH3)	1601	Insufficient refrigerant
1211	Thermistor <Suction pipe> (TH6)		Closed cooling valve
1214	Thermistor <Heat sink> (TH8)	1608	4-way valve disconnection
1221	Thermistor <Ambient> (TH7)	4310	Current sensor open/short
1222	Thermistor <HIC> (TH2)	4320	Undervoltage, overvoltage, or power module
1400	Low pressure sensor	4330	Heat sink temperature
1402	High pressure (63H)	4350	Power module
	High pressure sensor (63HS)	4500	Outdoor fan motor

No.	SW1 setting 12345678	Display mode	Display on the LED1, 2 (display data) 1	2	3	4	5	6	7	8	Notes
26	01011000	Capacity code (No. 1 indoor unit)	0–255								•Display of indoor unit capacity code •The No. 1 unit will start from the M-NET address with the lowest number
27	11011000	Capacity code (No. 2 indoor unit)									
28	00111000	Capacity code (No. 3 indoor unit)									
29	10111000	Capacity code (No. 4 indoor unit)									
30	01111000	Capacity code (No. 5 indoor unit)									
31	11111000	IC1 operation mode	STOP	Fan	Cooling thermo-ON	Cooling thermo-OFF	Heating thermo-ON	Heating thermo-OFF			•Display of indoor unit operating mode
32	00000100	IC2 operation mode									
33	10000100	IC3 operation mode									
34	01000100	IC4 operation mode									
35	11000100	IC5 operation mode									
36	00100100	OC operation mode	Compressor ON/OFF	Heating/Cooling	Abnormal/normal	DEFROST/NO	Refrigerant pull back/no	Excitation current/no	3-min delay/no		Light on/light off
37	10100100	External connection status	CN3N1–3 input	CN3N1–2 input	CN3S1–2 input	CN3D1-3 input	CN3D1-2 input				Input: light on No input: light off
38	01100100	Communication demand capacity	0–255 (%)								Display of communication demand capacity
39	11100100	Number of compressor ON/OFF	0000–9999 (unit: x10)								Display a count of compressor operation/stop
40	00010100	Compressor operating current	0–999.9 (Arms)								Display detected current
41	10010100	Input current of outdoor unit									
42	01010100	Thermo-ON operating time	0000–9999 (unit: x10)								Display cumulative time of thermo-ON operation
43	11010100	Total capacity of thermo-ON	0–255								Display total capacity code of indoor units inthermo-ON
44	00110100	Number of indoor units	0–255								Display number of connected indoor units
45	10110100	DC bus voltage	0–999.9 (V)								Display bus voltage
46	01110100	State of LEV control	Td over heat prevention	SHd decrease prevention	Min.Sj correction depends on Td	Min.Sj correction depends on Shd	LEV opening correction depends on Pd	LEV opening correction depends on Td	Correction of high compression ratio prevention		Display active LEV control
47	11110100	State of compressor frequency control 1	Condensing temperature limit control	Compressor temperature control		Discharge temp. (heating) backup control	Pd abnormality control (heating)	Pd Back up control(heating)		Freeze prevention control at the beginning of SHd	Display active compressor frequency control
48	00001100	State of compressor frequency control 2	Heat sink over heat prevention control	Secondary current control	Input current control		Frequency restrain of receipt voltage change	Low pressure decrease prevention	Hz-up inhibit control at the beginning of SHd		
49	10001100	Protection input	63LS abnormality	HIC abnormality		Frozen protection	4-way valve disconnection abnormality	Delay caused by blocked valve in cooling mode	TH6 abnormality	Power module abnormality	
50	01001100	The second current value when microprocessor of POWER BOARD abnormality is detected	0–999.9[Arms]								Display data at time of abnormality
51	11001100	Heatsink temperature when microprocessor of POWER BOARDabnormality is detected	−99.9–999.9 (°F)								

State of compressor frequency(Hz) control	Content
Discharge pressure control	Hz control by pressure limitation
Compressor temperature control	Hz control by discharge temperature limitation
SV control	Hz control by bypass valve
Abnormal rise of Pd control	Control that restrains abnormal rise of discharge pressure
Heat sink over heat prevention control	Heat sink over heat prevention control
Secondary current control	Secondary current control
Input current control	Input current control
Hz correction of receipt voltage decrease prevention	Max.Hz correction control due to voltage decrease
Hz restrain of receipt voltage change	Max.Hz correction control due to receipt voltage change

No.	SW1 setting 12345678	Display mode	Display on the LED1, 2 (display data) 1	2	3	4	5	6	7	8	Notes
52	00101100	Outdoor LEV-A opening pulse	0–2000 (pulse)								Display of opening pulse of outdoor LEV
53	10101100	Outdoor LEV-A opening pulse abnormality delay									
54	01101100	Outdoor LEV-A opening pulse abnormality									
55	11101100	Outdoor LEV-B opening pulse									
56	00011100	Outdoor LEV-B opening pulse abnormality delay									
57	10011100	Outdoor LEV-B opening pulse abnormality									
58	01011100	63LS (Low pressure)	−99.9–999.9 (PSIG)								Display of data from sensor and thermistor
59	11011100	63LS abnormality delay	−99.9–999.9 (PSIG)								
60	00111100	63 LS abnormality									
61	10111100	TH2 (Hic pipe)	−99.9–999.9 (°F)								
62	01111100	TH2(Hic) abnormality delay	−99.9–999.9 (°F)								
63	11111100	TH2 (Hic) abnormality									
64	00000010	Operational frequency	0–255 (Hz)								Display of actual operating frequency
65	10000010	Target frequency	0–255 (Hz)								Display of target frequency
66	01000010	Outdoor fan control step number	0–15								Display of number of outdoor fan control steps (target)
69	10100010	IC1 LEV Opening pulse	0–2000 (pulse)								Display of opening pulse of indoor LEV
70	01100010	IC2 LEV Opening pulse									
71	11100010	IC3 LEV Opening pulse									
72	00010010	IC4 LEV Opening pulse									
73	10010010	IC5 LEV Opening pulse									
74	01010010	High pressure sensor (Pd)	−99.9–999.9 (PSIG)								Display detected data of outdoor unit sensors and thermistors
75	11010010	TH4(Compressor)(Td) data	−99.9–999.9 (°F)								
76	00110010	TH6(Suction pipe) (ET) data									
77	10110010	TH7(Ambient) data									
78	01110010	TH3(Outdoor liquid pipe) data									
80	00001010	TH8(Heat sink) data									
81	10001010	IC1 TH23 (Gas)	−99.9–999.9 (°F) (When indoor unit is not connected, it is displayed as0.)								Display detected data of indoor unit thermistor
82	01001010	IC2 TH23 (Gas)									
83	11001010	IC3 TH23 (Gas)									
84	00101010	IC4 TH23 (Gas)									
85	10101010	IC5 TH23 (Gas)									

No.	SW1 setting 12345678	Display mode	Display on the LED1, 2 (display data) 1	2	3	4	5	6	7	8	Notes
86	01101010	IC1 TH22 (Liquid)	−99.9–999.9 (°F) (When the indoor unit is not connected, it is displayed as 0.)								Display detected data of indoor unit thermistors
87	11101010	IC2 TH22 (Liquid)									
88	00011010	IC3 TH22 (Liquid)									
89	10011010	IC4 TH22 (Liquid)									
90	01011010	IC5 TH22 (Liquid)									
91	11011010	IC1 TH21 (Intake)									
92	00111010	IC2 TH21 (Intake)									
93	10111010	IC3 TH21 (Intake)									
94	01111010	IC4 TH21 (Intake)									
95	11111010	IC5 TH21 (Intake)									
96	00000110	Outdoor SC (cooling)	−99.9–999.9 (°C)								Display of outdoor subcool (SC) data
97	10000110	Target subcool step	−2–4								Display of target subcool step data
98	01000110	IC1 SC/SH	−99.9–999.9 (°C) during heating: subcool (SC)/during cooling: superheat (SH) (Fixed to "0" during cooling operation)								Display of indoor SC/SH data
99	11000110	IC2 SC/SH									
100	00100110	IC3 SC/SH									
101	10100110	IC4 SC/SH									
102	01100110	IC5 SC/SH									
103	11100110	Discharge superheat (SHd)	−99.9–999.9 (°C)								Display of outdoor discharge superheat (SHd) data
105	10010110	Target Pd display (heating) kgf/F	Pdm (0.0–30.0) (kgf/cm²)								Display of all control target data
106	01010110	Target ET display (cooling)	ETm (−2.0–23.0) (°C)								
107	11010110	Target outdoor SC (cooling)	SCm (0.0–20.0) (°C)								
108	00110110	Target indoor SC/SH (IC1)	SCm/SHm (0.0–20.0) (°C)								
109	10110110	Target indoor SC/SH (IC2)									
110	01110110	Target indoor SC/SH (IC3)									
111	11110110	Target indoor SC/SH (IC4)									
112	00001110	Target indoor SC/SH (IC5)									
113	10001110	Indoor unitcheck status (IC9-12)	No.9 unit check	No.10 unit check	No.11 unit check	No.12 unit check					Light on at time of abnormality
114	01001110	Indoor unit operation mode (IC9-12)	No.9 unit mode	No.10 unit mode	No.11 unit mode	No.12 unit mode					COOL/DRY: light on HEAT: light blinking FAN/STOP: light off
115	11001110	Indoor unit operation display (IC9-12)	No.9 unit operation	No.10 unit operation	No.11 unit operation	No.12 unit operation					Thermo-ON: light on Thermo-OFF: light off
116	00101110	IC9 operation mode	STOP	Fan	Cooling Thermo-ON	Cooling thermo-OFF	Heating thermo-ON	Heating thermo-OFF			Display of indoor unit operation mode
117	10101110	IC10 operation mode									
118	01101110	IC11 operation mode									
119	11101110	IC12 operation mode									
120	00011110	Target indoor SC/SH (IC9)	SCm/SHm (0.0–20.0) (°C)								Display of all control target data
121	10011110	Target indoor SC/SH (IC10)									
122	01011110	Target indoor SC/SH (IC11)									
123	11011110	Target indoor SC/SH (IC12)									
124	00111110	IC9 LEV opening pulse abnormality delay	0–2000 (pulse)								Display of opening pulse of indoor LEV at time of abnormality delay
125	10111110	IC10 LEV opening pulse abnormality delay									
126	01111110	IC11 LEV opening pulse abnormality delay									
127	11111110	IC12 LEV opening pulse abnormality delay									

No.	SW1 setting 12345678	Display mode	Display on the LED1, 2 (display data) 1	2	3	4	5	6	7	8	Notes
128	00000001	Actual frequency of abnormality delay	0–255 (Hz)								Display of actual frequency at time of abnormality delay
129	10110001	Fan step number at time of abnormality delay	0–15								Display of fan step number at time of abnormality delay
131	11000001	IC1 LEV opening pulse abnormality delay	0–2000 (pulse)								Delay of opening pulse of indoor LEV at time of abnormality delay
132	00100001	IC2 LEV opening pulse abnormality delay									
133	10100001	IC3 LEV opening pulse abnormality delay									
134	01100001	IC4 LEV opening pulse abnormality delay									
135	11100001	IC5 LEV opening pulse abnormality delay									
136	00010001	High pressure sensor data at time of abnormality delay kgf/cm2	−99.9–999.9 (PSIG)								Display of data from High pressure sensor, all thermistors, and SC/SH at time of abnormality delay
137	10010001	TH4 (Compressor) sensor data at time of abnormality delay °C	−99.9–999.9 (°F)								
138	01010001	TH6 (Suction pipe) sensor data at time of abnormality delay °C									
139	11010001	TH3 (Outdoor liquid pipe) sensor data at time of abnormality delay °C									
140	00110001	TH8 (Heat sink) sensor data at time of abnormality delay °C									
141	10110001	OC SC (cooling) at time of abnormality delay °C	−99.9–999.9(°C) During heating: subcool (SC) During cooling; superheat (SH) (Fixed to "0" during cooling operation)								
142	01110001	IC1 SC/SH at time of abnormality delay °C									
143	11110001	IC2 SC/SH at time of abnormality delay °C									
144	00001001	IC3 SC/SH at time of abnormality delay °C									
145	10001001	IC4 SC/SH at time of abnormality delay °C									
146	01001001	IC5 SC/SH at time of abnormality delay °C									
147	11001001	IC9 SC/SH at time of abnormality delay °C									
148	00100001	IC10 SC/SH at time of abnormality delay °C									
149	10101001	IC11 SC/SH at time of abnormality delay °C									
150	01101001	IC12 SC/SH at time of abnormality delay °C									

No.	SW1 setting	Display mode	Display on the LED1, 2 (display data)								Notes
	12345678		1	2	3	4	5	6	7	8	
151	11101001	IC9 LEV opening pulse at time of abnormality	0–2000 (pulse)								Display of opening pulse of indoor LEV at time of abnormality
152	00011001	IC10 LEV opening pulse at time of abnormality									
153	10011001	IC11 LEV opening pulse at time of abnormality									
154	01011001	IC12 LEV opening pulse at time of abnormality									
155	11011001	IC9 SC/SH at time of abnormality	−99.9–999.9(°C) During heating: subcool (SC) During cooling; superheat (SH) (Fixed to "0" during cooling operation)								Display of indoor SC/SH data at time of abnormality
156	00111001	IC10 SC/SH at time of abnormality									
157	10111001	IC11 SC/SH at time of abnormality									
158	01111001	IC12 SC/SH at time of abnormality									
159	11111001	IC9 Capacity code	0–255								Display of indoor unit capacity code The No.1 unit will start from the M-NET address with the lowest number
160	00000101	IC10 Capacity code									
161	10000101	IC11 Capacity code									
162	01000101	IC12 Capacity code									
163	11000101	IC9 SC/SH	−99.9–999.9(°C) During heating: subcool (SC) During cooling; superheat (SH) (Fixed to "0" during cooling operation)								Display of indoor SC/SH data
164	00100101	IC10 SC/SH									
165	10100101	IC11 SC/SH									
166	01100101	IC12 SC/SH									
170	01010101	ROM version monitor	0.00–99.99 (ver)								Display of version data of ROM
171	11010101	ROM type									Display of ROM type
172	00110101	Check sum mode	0000–FFFF								Display of check sum code of ROM
173	10110101	IC9 TH23 (Gas)	−99.9–999.9 (°F)								Display detected data of indoor unit thermistors
174	01110101	IC10 TH23 (Gas)									
175	11110101	IC11 TH23 (Gas)									
176	00001101	IC12 TH23 (Gas)									
177	10001101	IC9 TH22 (Liquid)									
178	01001101	IC10 TH22 (Liquid)									
179	11001101	IC11 TH22 (Liquid)									
180	00101101	IC12 TH22 (Liquid)									
181	10101101	Backup heating determination value "a"									
182	01101101	Backup heating determination value "b"									
183	11101101	Backup heating determination value "c"									
184	00011101	Backup heating determination value "d"									
185	10011101	IC9 TH21 (Intake)									
186	01011101	IC10 TH21 (Intake)									
187	11011101	IC11 TH21 (Intake)									
188	00111101	IC12 TH21 (Intake)									

No.	SW1 setting 12345678	Display mode	Display on the LED1, 2 (display data) 1	2	3	4	5	6	7	8	Notes
189	10111101	History of voltage error (U9/4220)	-	-	PAM error	Converter Fault	Power synchronization signal error	L1 open phase error	Under voltage error	Over voltage error	
190	01111101	External connection status at time of abnormality delay	CN3N 1-3 input	CN3N 1-2 input	CN3S 1-2 input	CN3D 1-3 input	CN3D 1-2 input				
191	11111101	External connection status at time of abnormality	CN3N 1-3 input	CN3N 1-2 input	CN3S 1-2 input	CN3D 1-3 input	CN3D 1-2 input				
192	00000011	Actual frequency of abnormality	0–255 (Hz)								Display of actual frequency at time of abnormality
193	10000011	Fan step number at time of abnormality	0–15								Display of fan step number at time of abnormality
195	11000011	IC1 LEV opening pulse at time of abnormality	0–2000 (pulse)								Display of opening pulse of indoor LEV at time of abnormality
196	00100011	IC2 LEV opening pulse at time of abnormality									
197	10100011	IC3 LEV opening pulse at time of abnormality									
198	01100011	IC4 LEV opening pulse at time of abnormality									
199	11100011	IC5 LEV opening pulse at time of abnormality									
200	00010011	High pressure sensor data at time of abnormality	−99.9–999.9 (PSIG)								Display of data from High pressure sensor, all thermistors, and SC/SH at time of abnormality.
201	10010011	TH4 (Compressor) sensor data at time of abnormality	−99.9–999.9 (°F)								
202	01010011	TH6 (Suction pipe) sensor data at time of abnormality									
203	11010011	TH3 (Outdoor liquid pipe) sensor data at time of abnormality									
204	00110011	TH8 (Heat sink) sensor data at time of abnormality									
205	10110011	OC SC (cooling) at time of abnormality	−99.9–999.9(°C) During heating: subcool (SC) During cooling; superheat (SH) (Fixed to "0" during cooling operation)								Display of indoor SC/SH data at time of abnormality
206	01110011	IC1 SC/SH at time of abnormality									
207	11110011	IC2 SC/SH at time of abnormality									
208	00001011	IC3 SC/SH at time of abnormality									
209	10001011	IC4 SC/SH at time of abnormality									
210	01001011	IC5 SC/SH at time of abnormality									
211	11001011	IC6 Capacity code	0–255								Display of indoor unit capacity code The No.1 unit will start from the M-NET address with the lowest number
212	00101011	IC7 Capacity code									
213	10101011	IC8 Capacity code									
214	01101011	IC6 operation mode	STOP	Fan	Cooling thermo-ON	Cooling thermo-OFF	Heating thermo-ON	Heating thermo-OFF			Display of indoor unit operation mode
215	11101011	IC7 operation mode									
216	00011011	IC8 operation mode									

No.	SW1 setting 12345678	Display mode	Display on the LED1, 2 (display data) 1	2	3	4	5	6	7	8	Notes
217	10011011	IC6 LEV opening pulse	0–2000 (pulse)								Display of opening pulse of indoor LEV
218	01011001	IC7 LEV opening pulse									
219	11011001	IC8 LEV opening pulse									
220	00111011	IC6 TH23 (Gas)	−99.9–999.9 (°F)								Display detected data of indoor unit thermistor
221	10111011	IC7 TH23 (Gas)									
222	01111011	IC8 TH23 (Gas)									
223	11111011	IC6 TH22 (liquid)									
224	00000111	IC7 TH22 (liquid)									
225	10000111	IC8 TH22(liquid)									
226	01000111	IC6 TH21 (intake)									
227	11000111	IC7 TH21 (intake)									
228	00100111	IC8 TH21 (intake)									
229	10100111	IC6 SC/SH	−99.9–999.9 (°C) during heating: subcool (SC)/during cooling: superheat (SH) (Fixed to "0" during cooling operation)								Display of indoor SC/SH data
230	01100111	IC7 SC/SH									
231	11100111	IC8 SC/SH									
232	00010111	Target indoor SC/SH (IC6)	SCm/SHm (0.0–20.0) (°C)								Display of all control target data
233	10010111	Target indoor SC/SH (IC7)									
234	01010111	Target indoor SC/SH (IC8)									
235	11010111	IC6 LEV opening pulse abnormality delay	0–2000 (pulse)								Display of opening pulse of indoor LEV at time of abnormality delay
236	00110111	IC7 LEV opening pulse abnormality delay									
237	10110111	IC8 LEV opening pulse abnormality delay									
238	01110111	IC6 SC/SH at time of abnormality delay	−99.9–999.9 (°C) During heating: subcool (SC) During cooling: superheat (SH) (Fixegd to "0" during cooling operation)								Display of indoor SC/SH data at time of abnormality delay
239	11110111	IC7 SC/SH at time of abnormality delay									
240	00001111	IC8 SC/SH at time of abnormality delay									
241	10001111	IC6 LEV opening pulse at time of abnormality	0–2000 (pulse)								Display of opening pulse of indoor LEV at time of abnormality
242	01001111	IC7EV opening pulse at time of abnormality									
243	11001111	IC8 LEV opening pulse at time of abnormality									
244	00101111	IC6 SC/SH at time of abnormality	−99.9–999.9 (°C) During heating: subcool (SC) During cooling: superheat (SH) (Fixed to "0" during cooling operation)								Display of indoor SC/SH data at time of abnormality delay
245	10101111	IC7 SC/SH at time of abnormality									
246	01101111	IC8 SC/SH at time of abnormality									
250	01011111	IC9 LEV opening pulse	0–2000 (pulse)								Display of opening pulse of indoor LEV
251	11011111	IC10 LEV opening pulse									
252	00111111	IC11 LEV opening pulse									
253	10111111	IC12 LEV opening pulse									

9 ELECTRICAL WIRING

This chapter provides an introduction to electrical wiring for MULTI-S series, together with notes concerning power wiring, wiring for control (transmission wires and remote controller wires), and the frequency converter.

9-1. OVERVIEW OF POWER WIRING

(1) Use a separate power supply for the outdoor unit and indoor unit.
(2) Bear in mind ambient conditions (ambient temperature, direct sunlight, rain water, etc.) when proceeding with the wiring and connections.
(3) The wire size is the minimum value for metal conduit wiring. The power cord size should be 1 rank thicker consideration of voltage drops. Make sure the power-supply voltage does not drop more than 10 %.
(4) Specific wiring requirements should adhere to the wiring regulations of the region.
(5) Power supply cords of parts of appliances for outdoor use shall not be lighter than polychloroprene sheathed flexible cord (design 60245 IEC57). For example, use wiring such as YZW.
(6) Install an earth line longer than power cables.

⚠ Warning:
- Be sure to use specified wires to connect so that no external force is imparted to terminal connections. If connections are not fixed firmly, it may cause heating or fire.
- Be sure to use the appropriate type of overcurrent protection switch. Note that generated overcurrent may include some amount of direct current.

⚠ Caution:
- Some installation site may require attachment of an earth leakage breaker. If no earth leakage breaker is installed, it may cause an electric shock.
- Do not use anything other than breaker and fuse with correct capacity. Using fuse and wire or copper wire with too large capacity may cause a malfunction of unit or fire.
- Be sure to install N-Line. Without N-Line, it could cause damage to the unit.

9-2. WIRING OF MAIN POWER SUPPLY AND EQUIPMENT CAPACITY

9-2-1. Wiring diagram for main power supply

■ Schematic Drawing of Wiring : When NOT using a Branch Box (example)

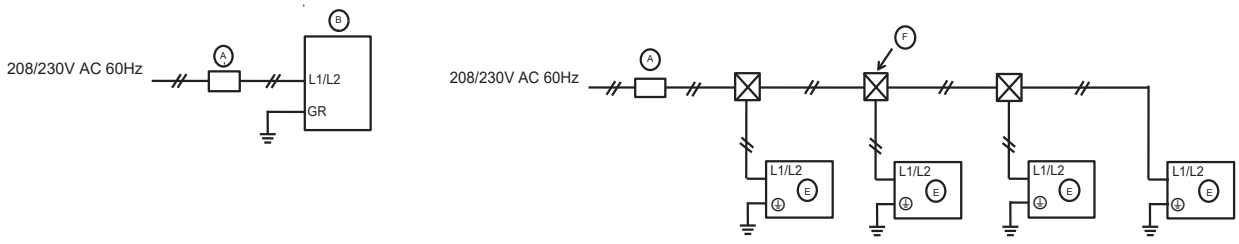

Note: The CITY MULTI series indoor unit cannot receive power supplied from an outdoor unit, so provide it with power separately.

Ⓐ Switch (Breakers for Wiring and Current Leakage)
Ⓑ Outdoor Unit
Ⓒ Branch Box
Ⓓ A-Control Indoor Unit
Ⓔ CITY MULTI series Indoor unit
Ⓕ Pull Box

■ Schematic Drawing of Wiring : When using Branch Boxes (example)
<When power is supplied to branch box from the outdoor unit>

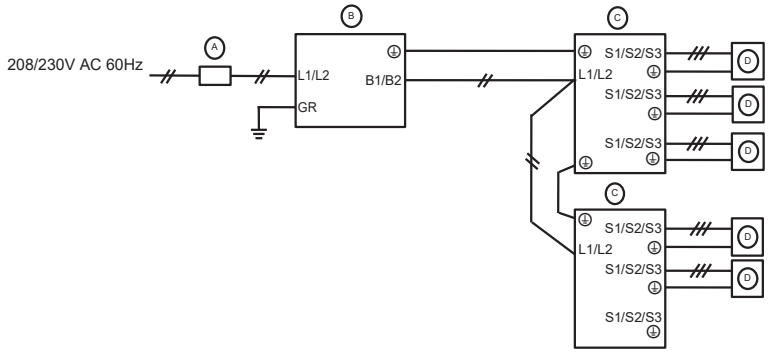

<When power is supplied to outdoor unit and branch box separately>

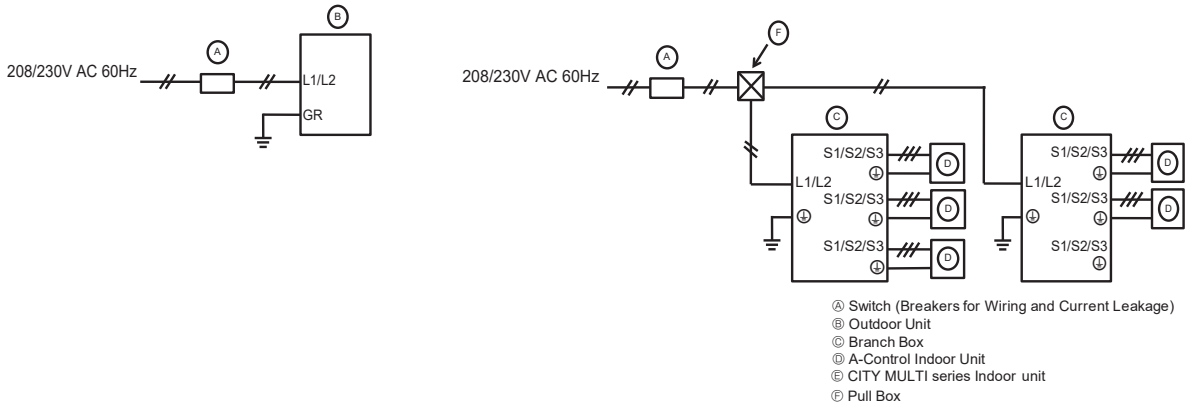

9-2-2. Cross section area of Wire for Main Power and ON/OFF capacities

Thickness of Wire for Main Power Supply and On/Off Capacities

<When power is supplied separately>

Model		Power Supply	Minimum Wire Thickness (mm^2 [AWG]) Main Cable*2	Ground	Conduit size	Breaker for Wiring*1	Breaker for Current Leakage(If you use)	Minimum circuit ampacity	Maximum rating of over current protector device
Outdoor Unit	36/48NAM2	208/230 VAC, 60 Hz	5.3 [AWG10]	5.3 [AWG10]	1*3	30 A	30 A, 30 mA 0.1 second or less	36 A	64 A
	36/42/48NAMHZ2		8.4 [AWG8]	8.4 [AWG8]	1*3	40 A	40 A, 30 mA 0.1 second or less	45 A	80 A
	60NAM2		8.4 [AWG8]	8.4 [AWG8]	1*3	40 A	40 A, 30 mA 0.1 second or less	45 A	80 A
Branch Box			Refer to installation manual of Branch Box.						

<When power is supplied from the outdoor unit>

Model		Power Supply	Minimum Wire Thickness (mm^2 [AWG]) Main Cable*2	Ground	Conduit size	Breaker for Wiring*1	Breaker for Current Leakage(If you use)	Minimum circuit ampacity	Maximum rating of over current protector device
Outdoor Unit	36/48NAM2	208/230 VAC, 60 Hz	8.4 [AWG8]	8.4 [AWG8]	1*3	40 A	40 A, 30 mA 0.1 second or less	42 A	70 A
	36/42/48NAMHZ2		13.3 [AWG6]	13.3 [AWG6]	1	45 A	45 A, 30 mA 0.1 second or less	51 A	86 A
	60NAM2		13.3 [AWG6]	13.3 [AWG6]	1	50 A	50 A, 30 mA 0.1 second or less	55 A	90 A
Branch Box			Refer to installation manual of Branch Box.						

*1 Please follow applicable federal, state, or local codes to prevent potential leakage/electric shock. Or install a ground fault interrupt for the prevention of leakage and electric shock.

IMPORTANT
If a current leakage breaker is used, it should be compatible with higher harmonics as this unit is equipped with an inverter. The use of an inadequate breaker can cause the incorrect operation of inverter.

*2 Use copper supply wires. Use the electric wires over the rating voltage 300 V.
*3 Although the conduit size is larger than the size specified for the wire thickness according to UL standards, use a conduit size of 1 inch.

Total operating current of the indoor unit	Minimum wire thickness (mm²/AWG)			Ground-fault interrupter *1 (If you use)	Local switch (A)		Breaker for wiring (NFB)
	Main Cable	Branch	Ground		Capacity	Fuse	
F0 = 15 A or less *2	2.1/14	2.1/14	2.1/14	15 A current sensitivity *3	15	15	15
F0 = 20 A or less *2	3.3/12	3.3/12	3.3/12	20 A current sensitivity *3	20	20	20
F0 = 30 A or less *2	5.3/10	5.3/10	5.3/10	30 A current sensitivity *3	30	30	30

Apply to IEC61000-3-3 about max. permissive system impedance.

*1 The Ground-fault interrupter should support inverter circuit.
The Ground-fault interrupter should combine using of local switch or wiring breaker.

*2 Please take the larger of F1 or F2 as the value for F0.
F1 = Total operating maximum current of the indoor units × 1.2
F2 = {V1 × (Quantity of Type1)/C} + {V1 × (Quantity of Type2)/C} + {V1 × (Quantity of Type3)/C} + {V1 × (Quantity of Type4)/C} + ... + {V1 × (Quantity of Type14)/C}

Indoor unit		V1	V2
Type 1	PEAD-A·AA9	30.1	2.2
Type 2	PEAD-A·AA8, SVZ-KP·NA, PAA-A·A	26.9	2.4
Type 3	PLA-A·EA7, SEZ-KD·NA	19.8	
Type 4	SLZ-KF·NA, PLA-A·EA8	17.1	
Type 5	MLZ-KP·NA(2)	9.9	
Type 6	MFZ-KJ·NA, MSZ-GL·NA, MSZ-FS·NA, MSZ-GS·NA, MLZ-KY·NA, MXZ-EF·NA2W(B)(S)-U1	7.4	
Type 7	MSZ-FH·NA, MSZ-FH·NA2, MSZ-EF·NAW(B)(S)-U1	6.8	
Type 8	Branch box	5.1	3.0
Type 9	PEFY-P·NMAU-E3, PVFY-P·NAMU	38.0	1.6
Type 10	PKFY-P·NKMU, PEFY-P·NMSU, PCFY-P·NKMU, PLFY-EP·NEMU, PLFY-P·NFMU, PMFY-P·NBMU-ER5, PKFY-P·NLMU	19.8	2.4
Type 11	PEFY-P·NMHU, PFFY-P·NEMU, PFFY-P·NRMU	0.0	0.0
Type 12	PEFY-P·NMHSU (connected to MXZ-SM60 only)	13.8	4.8
Type 13	PEFY-P·NMAU-E4, PEFY-P·NMAU-E5	18.6	3.0
Type 14	PMFY-P·NBMU-ER6	9.9	2.4

C: Multiple of tripping current at tripping time 0.01s
Please pick up "C" from the tripping characteristic of the breaker.
<Example of "F2" calculation>
• Condition PEFY-NMSU × 4 + PEFY-NMAU-E3 × 1, C = 8 (refer to right sample chart)
F2 = 19.8 × 4/8 + 38 × 1/8
= 14.65
→ 16 A breaker (Tripping current = 8 × 16 A at 0.01 s)

Sample chart

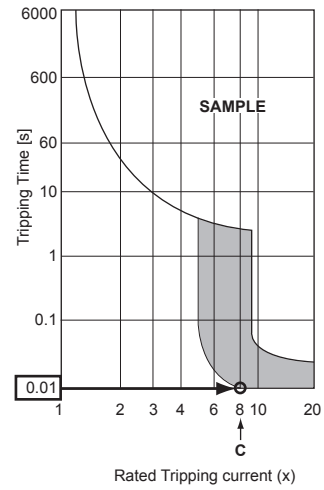

*3 Current sensitivity is calculated using the following formula.
G1 = V2 × (Quantity of Type1) + V2 × (Quantity of Type2) + V2 × (Quantity of Type3) +...
+ V2 × (Quantity of Type14) + V3 × (Wire length [km])

G1	Current sensitivity
30 or less	30 mA 0.1 second or less
100 or less	100 mA 0.1 second or less

Wire thickness (mm²/AWG)	V3
2.1/14	48
3.3/12	56
5.3/10	66

1. Use a separate power supply for the outdoor unit and indoor unit.
2. Bear in mind ambient conditions (ambient temperature, direct sunlight, rain water etc.) when proceeding with the wiring and connections.
3. The wire size is the minimum value for metal conduit wiring. The power cord size should be 1 rank thicker consideration of voltage drops. Make sure the power-supply voltage does not drop more than 10%.
4. Specific wiring requirements should adhere to the wiring regulations of the region.
5. Power supply cords of parts of appliances for outdoor use shall not be lighter than polychloroprene sheathed flexible cord (design 60245 IEC57). For example, use wiring such as YZW.
6. Install an earth line longer than power cables.

9-3. DESIGN FOR CONTROL WIRING

Please note that the types and numbers of control wires needed by MULTI-S series depend on the remote controllers and whether they are linked with the system or not.

9-3-1. Selection number of control wires

		M-NET remote controller
Use		Remote controller used in system control operations • Group operation involving different refrigerant systems • Linked operation with upper control system
Remote controller → indoor unit		2-core wire (non-polar)
Transmission wires	Wires connecting → indoor units	
	Wires connecting → indoor units with outdoor unit	
	Wires connecting → outdoor units	

9-4. WIRING TRANSMISSION CABLES

9-4-1. Types of control cables

1. Wiring transmission cables

Types of transmission cables	Shielded wire CVVS, CPEVS, or MVVS
Cable diameter	More than 13.5 ft^2 [1.25 mm^2]
Maximum wiring length	Within 656 ft [200 m]

2. M-NET Remote control cables

Types of remote control cable	Shielded wire (2-core) CVVS, CPEVS, or MVVS
Cable diameter	AWG 20 to AWG 16 [0.5 to 1.25 mm^2]
Remarks	When 10 m is exceeded, use a cable with the same specifications as transmission line wiring.

3. MA Remote control cables

Type of remote control cable	Sheathed 2-core cable (unshielded) CVV
Cable diameter	AWG 22 to AWG 16 [0.3 to 1.25 mm^2] AWG 18 to AWG 16 [0.75 to 1.25 mm^2]*
Remarks	Within 656 ft [200 m]

* Connected with simple remote controller.

9-4-2. Wiring examples

• Controller name, symbol and allowable number of controllers.

Name		Symbol	Allowable number of controllers	
Outdoor unit controller		OC	—	
Indoor unit controller	CITY MULTI series	M-IC	SM36	1 to 11 units per 1 OC[*1]
			SM42/48/60	1 to 12 units per 1 OC[*1]
	M, S, P series	A-IC	SM36	2 to 4 units per 1 OC[*1]
			SM42	2 to 5 units per 1 OC[*1]
			SM48	2 to 8 units per 1 OC[*1]
			SM60	2 to 8 units per 1 OC[*1]
Branch box		BC	—	0 to 2 units per 1 OC[*1]
Remote controller		RC	M-NET RC[*2]	Maximum of 12 controllers for 1 OC[*1]
			MA-RC	Maximum of 2 per group

Note:

[*1] The number of connectable units may be limited by some conditions such as an indoor unit's capacity or each unit's equivalent power consumption.
[*2] Don't use the Lossnay controller (PZ-61DR-E, PZ-43SMF-E, PZ-52SF-E, PZ-60DR-E).

9-5. SYSTEM SWITCH SETTING

In order to identify the destinations of signals to the outdoor units, indoor units, and remote controller of MULTI-S series, each microprocessor must be assigned an identification number (address). The addresses of outdoor units, indoor units, and remote controller must be set using their settings switches. Please consult the installation manual that comes with each unit for detailed information on setting procedures.

9-6. EXAMPLE EXTERNAL WIRING DIAGRAM FOR A BASIC SYSTEM

■ Example of system when using an M-NET controller

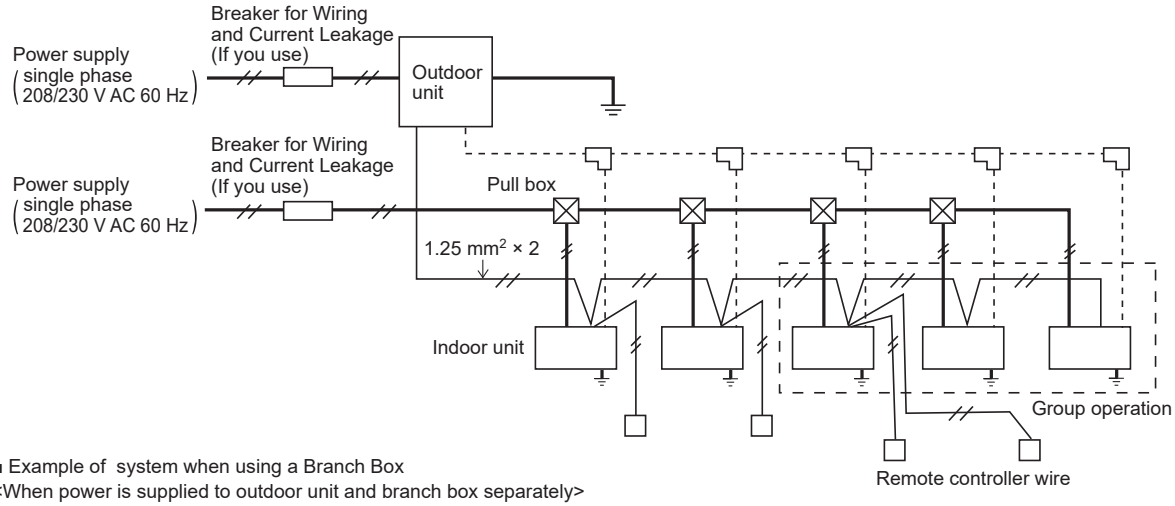

■ Example of system when using a Branch Box

<When power is supplied to outdoor unit and branch box separately>

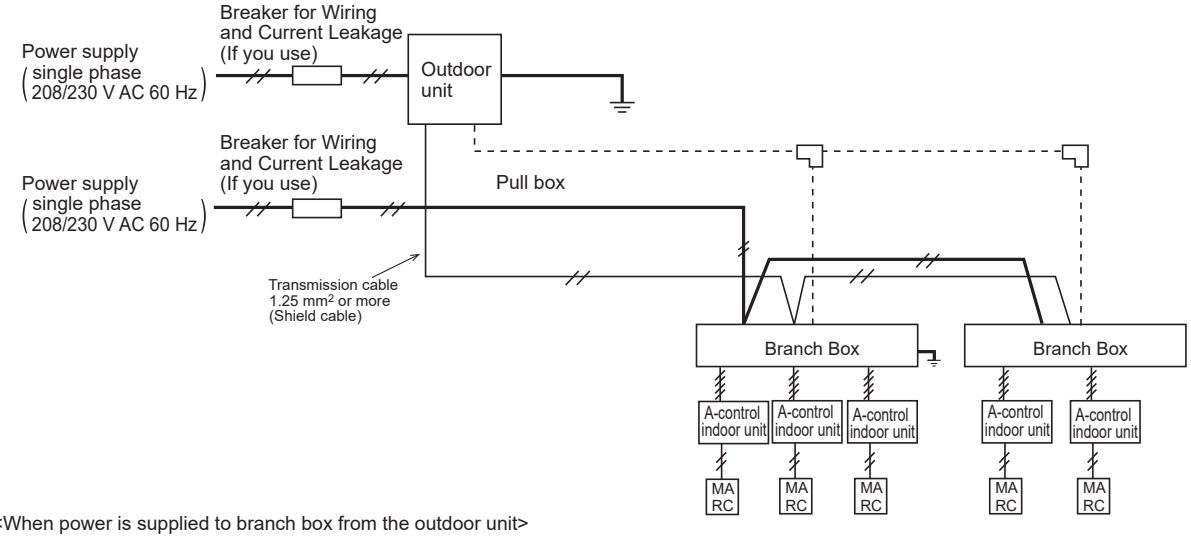

<When power is supplied to branch box from the outdoor unit>

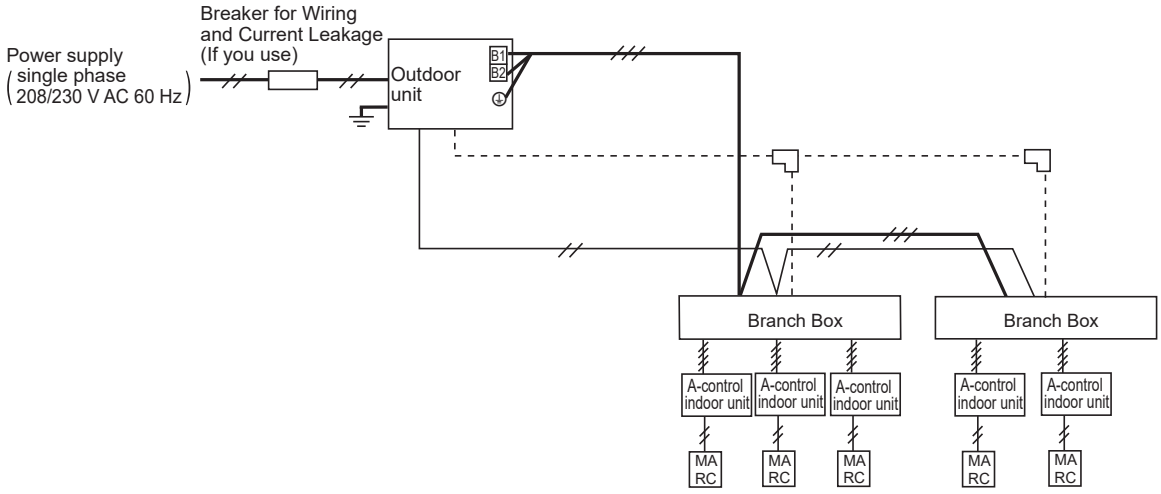

9-7. METHOD FOR OBTAINING ELECTRICAL CHARACTERISTICS WHEN A CAPACITY AGREEMENT IS TO BE SIGNED WITH AN ELECTRIC POWER COMPANY

The electrical characteristics of connected indoor unit system for air conditioning systems, including CITY MULTI series, depend on the arrangement of the indoor and outdoor units.
First read the data on the selected indoor and outdoor units and then use the following formulas to calculate the electrical characteristics before applying for a capacity agreement with the local electric power company.

9-7-1. Obtaining the electrical characteristics of CITY MULTI series system

(1) Procedure for obtaining total power consumption

	Page numbers in this technical manual	Power consumption
Total power consumption of each indoor unit	See the technical manual of each indoor unit.	①
Power consumption of outdoor unit*	Standard capacity diagram— Refer to 4-4.	②
Total power consumption of system	See the technical manual of each indoor unit.	①+②<kW>

*The power consumption of the outdoor unit will vary depending on the total capacity of the selected indoor units.

(2) Method of obtaining total current

	Page numbers in this technical manual	Subtotal
Total current through each indoor unit	See the technical manual of each indoor unit.	①
Current through outdoor unit*	Standard capacity diagram— Refer to 4-4.	②
Total current through system	See the technical manual of each indoor unit.	①+②<A>

The current through the outdoor unit will vary depending on the total capacity of the selected indoor units.

(3) Method of obtaining system power factor

Use the following formula and the total power and current obtained in parts ① and ② on the above tables to calculate the system power factor.

$$\text{System power factor} = \frac{\text{(Total system power consumption)}}{\text{(Total system current} \times \text{voltage)}} \times 100\ \%$$

9-7-2. Applying to an electric power company for power and total current

Calculations should be performed separately for heating and cooling employing the same methods; use the largest resulting value in your application to the electric power company.

10 REFRIGERANT PIPING TASKS

10-1. REFRIGERANT PIPING SYSTEM

10-1-1. MXZ-SM36NAM2-U1 MXZ-SM36NAMHZ2-U1
MXZ-SM42NAMHZ2-U1
MXZ-SM48NAM2-U1 MXZ-SM48NAMHZ2-U1

Line-Branch Method
Connection Examples
(Connecting to 4 Indoor Units)

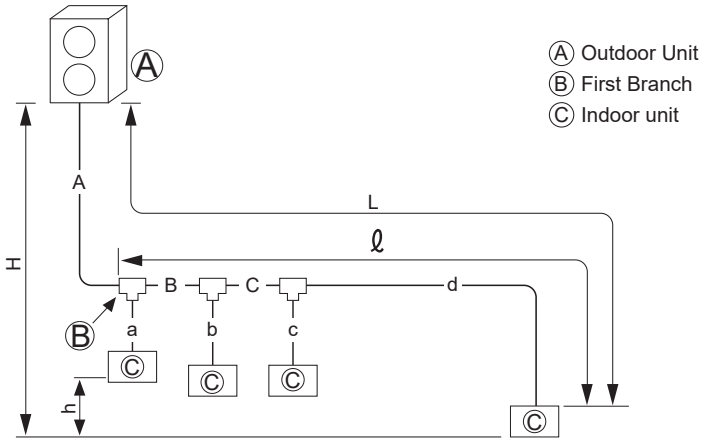

Permissible Length	Total Piping Length	A+B+C+a+b+c+d ≤ 984 ft [300 m]
	Farthest Piping Length (L)	A+B+C+d ≤ 492 ft [150 m]
	Farthest Piping Length After First Branch (ℓ)	B+C+d ≤ 98 ft [30 m]
Permissible High/Low Difference	High/Low Difference in Indoor/Outdoor Section (H)	The outdoor unit is upper: 164ft [50m] or less The outdoor unit is lower: 131ft [40m] or less (98ft [30,] or less if PKFY-P04/06/08/12NLMU, PFFY-P06/08/12NEMU, and PFFY-P06/08/12NRMU are included.)
	High/Low Difference in Indoor/Indoor Section (h)	49 ft [15 m]

■ Selecting the Refrigerant Branch Kit

Use an optional branch piping kit (CMY-Y62-G-E).

■ Select Each Section of Refrigerant Piping

(1) Section From Outdoor Unit to First Branch (A)
(2) Sections From Branch to Indoor Unit (a,b,c,d)
(3) Section From Branch to Branch (B,C)
} Each Section of Piping

Select the size from the table to the right.

(1) Refrigerant Piping Diameter In Section From Outdoor Unit to First Branch (Outdoor Unit Piping Diameter)

Model	Piping Diameter (inch [mm])	
MXZ-SM36/42/48	Liquid Line	3/8 [ø9.52]
	Gas Line	5/8 [ø15.88]

(2) Refrigerant Piping Diameter In Section From Branch to Indoor Unit (Indoor Unit Piping Diameter)

Model number	Piping Diameter (inch [mm])	
18 or lower	Liquid Line	1/4 [ø6.35]
	Gas Line	1/2 [ø12.7]
24 to 54	Liquid Line	3/8 [ø9.52]
	Gas Line	5/8 [ø15.88]

(3) Refrigerant Piping Diameter In Section From Branch to Branch

Liquid Line (inch [mm])	Gas Line (inch [mm])
3/8 [ø9.52]	5/8 [ø15.88]

■ Additional refrigerant charge

Refrigerant for the extended piping is not included in the outdoor unit when the unit is shipped from the factory. Therefore, charge each refrigerant piping system with additional refrigerant at the installation site. In addition, in order to carry out service, enter the size and length of each liquid pipe and additional refrigerant charge amounts in the spaces provided on the "Refrigerant amount" plate on the outdoor unit.

Calculation of additional refrigerant charge

- Calculate the additional charge using the liquid pipe size and length of the extended piping and total capacity of connected indoor units.
- Calculate the additional refrigerant charge using the procedure shown to the right, and charge with the additional refrigerant.
- For amounts less than 0.2 lb [0.1 kg], round up the calculated additional refrigerant charge.
  (For example, if the calculated charge is 13.2 lb [6.01 kg], round up the charge to 13.4 lb [6.1 kg].)

<Additional Charge>
Calculation of refrigerant charge

Pipe size Liquid pipe ø6.35	+	Pipe size Liquid pipe ø9.52	+
[ft] × 0.21 [oz/ft] (m) × 19.0 (g/m)		[ft] × 0.55 [oz/ft] (m) × 50.0 (g/m)	

Total capacity of connected indoor units	Amount for the indoor units
– 27 kBtu/h	53 oz (1.5 kg)
28 – 54 kBtu/h	88 oz (2.5 kg)
55 – 62 kBtu/h	106 oz (3.0 kg)

Included refrigerant amount when shipped from the factory

Included refrigerant amount
10 LBS. 9 OZ. (4.8 kg)

<Example>
Outdoor model : SM48
Indoor 1 : P24 (24 kBtu/h)
2 : P15 (15 kBtu/h)
3 : P08 (8 kBtu/h)
4 : P06 (6 kBtu/h)

A : ø9.52 66 ft [20 m]
B : ø9.52 16 ft [5 m]
C : ø9.52 16 ft [5 m]
a : ø9.52 49 ft [15 m]
b : ø6.35 33 ft [10 m]
c : ø6.35 33 ft [10 m]
d : ø6.35 66 ft [20 m]
} At the conditions below:

The total length of each liquid line is as follows:
[3/8"] ø9.52 : A + B + C + a = 20 + 5 + 5 + 15 = 147 ft [45 m]
[1/4"] ø6.35 : b + c + d = 10 + 10 + 20 = 132 ft [40 m]
The total capacity of connected indoor unit is as follows:
24 + 15 + 08 + 06 = 53
<Calculation example>
Additional refrigerant charge

$$132\text{ ft} \times 0.21\text{ oz} + 147\text{ ft} \times 0.55\text{ oz} + 88\text{ oz} = 197\text{ oz}\left[40\times\frac{19.0}{1000} + 45\times\frac{50.0}{1000} + 2.5 = 5.6\text{ kg (rounded up)}\right]$$

Header-Branch Method
Connection Examples
(Connecting to 4 Indoor Units)

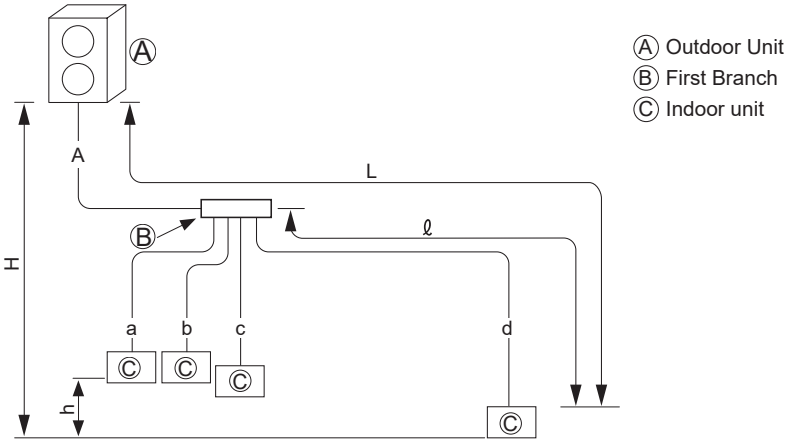

Permissible Length	Total Piping Length	A+a+b+c+d ≤ 984 ft [300 m]
	Farthest Piping Length (L)	A+d ≤ 492 ft [150 m]
	Farthest Piping Length After First Branch (ℓ)	d ≤ 98 ft [30 m]
Permissible High/Low Difference	High/Low Difference in Indoor/Outdoor Section (H)	The outdoor unit is upper: 164ft [50m] or less The outdoor unit is lower: 131ft [40m] or less (98ft [30,] or less if PKFY-P04/06/08/12NLMU, PFFY-P06/08/12NEMU, and PFFY-P06/08/12NRMU are included.)
	High/Low Difference in Indoor/Indoor Section (h)	49 ft [15 m]

■ **Selecting the Refrigerant Branch Kit**

Please select branching kit, which is sold separately, from the table below.
(The kit comprises sets for use with liquid pipes and for use with gas pipes.)

Branch header (4 branches)	Branch header (8 branches)
CMY-Y64-G-E	CMY-Y68-G-E

■ **Select Each Section of Refrigerant Piping**

(1) Section From Outdoor Unit to First Branch (A)
(2) Sections From Branch to Indoor Unit (a,b,c,d)
} Each Section of Piping

Select the size from the table to the right.

(1) Refrigerant Piping Diameter In Section From Outdoor Unit to First Branch (Outdoor Unit Piping Diameter)

Model	Piping Diameter (inch [mm])	
MXZ-SM36/42/48	Liquid Line	3/8 [ø9.52]
	Gas Line	5/8 [ø15.88]

(2) Refrigerant Piping Diameter In Section From Branch to Indoor Unit (Indoor Unit Piping Diameter)

Model number	Piping Diameter (inch [mm])	
18 or lower	Liquid Line	1/4 [ø6.35]
	Gas Line	1/2 [ø12.7]
24 to 54	Liquid Line	3/8 [ø9.52]
	Gas Line	5/8 [ø15.88]

(3) Refrigerant Piping Diameter In Section From Branch to Branch

Liquid Line (inch [mm])	Gas Line (inch [mm])
3/8 [ø9.52]	5/8 [ø15.88]

■ **Additional refrigerant charge**

Refer to the same section in the previous page.

Method of Combined Branching of Lines and Headers
Connection Examples
(Connecting to 5 Indoor Units)

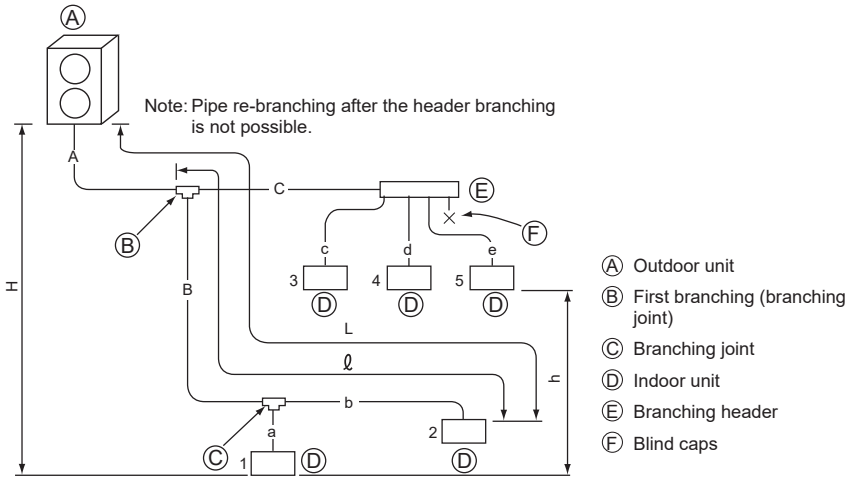

Permissible Length	Total Piping Length	A+B+C+a+b+c+d+e ≤ 984 ft [300 m]
	Farthest Piping Length (L)	A+B+b ≤ 492 ft [150 m]
	Farthest Piping Length After First Branch (ℓ)	B+b ≤ 98 ft [30 m]
Permissible High/Low Difference	High/Low Difference in Indoor/Outdoor Section (H)	The outdoor unit is upper: 164ft [50m] or less The outdoor unit is lower: 131ft [40m] or less (98ft [30,] or less if PKFY-P04/06/08/12NLMU, PFFY-P06/08/12NEMU, and PFFY-P06/08/12NRMU are included.)
	High/Low Difference in Indoor/Indoor Section (h)	49 ft [15 m]

■ **Selecting the Refrigerant Branch Kit**

Please select branching kit, which is sold separately, from the table below.
(The kit comprises sets for use with liquid pipes and for use with gas pipes.)

Branch Joint	Branch Header (4 branches)	Branch Header (8 branches)
CMY-Y62-G-E	CMY-Y64-G-E	CMY-Y68-G-E

■ **Select Each Section of Refrigerant Piping**

(1) Section From Outdoor Unit to First Branch (A)
(2) Sections From Branch to Indoor Unit (a,b,c,d,e)
(3) Section From Branch to Branch (B,C)
} Each Section of Piping

Select the size from the table to the right.

(1) Refrigerant Piping Diameter In Section From Outdoor Unit to First Branch (Outdoor Unit Piping Diameter)

Model	Piping Diameter (inch [mm])	
MXZ-SM36/42/48	Liquid Line	3/8 [ø9.52]
	Gas Line	5/8 [ø15.88]

(2) Refrigerant Piping Diameter In Section From Branch to Indoor Unit (Indoor Unit Piping Diameter)

Model number	Piping Diameter(inch [mm])	
18 or lower	Liquid Line	1/4 [ø6.35]
	Gas Line	1/2 [ø12.7]
24 to 54	Liquid Line	3/8 [ø9.52]
	Gas Line	5/8 [ø15.88]

(3) Refrigerant Piping Diameter In Section From Branch to Branch

Liquid Line (inch [mm])	Gas Line (inch [mm])
3/8 [ø9.52]	5/8 [ø15.88]

■ **Additional refrigerant charge**

Refer to the same section in the previous page.

10-1-2. MXZ-SM60NAM2-U1

Line-Branch Method
Connection Examples
(Connecting to 4 Indoor Units)

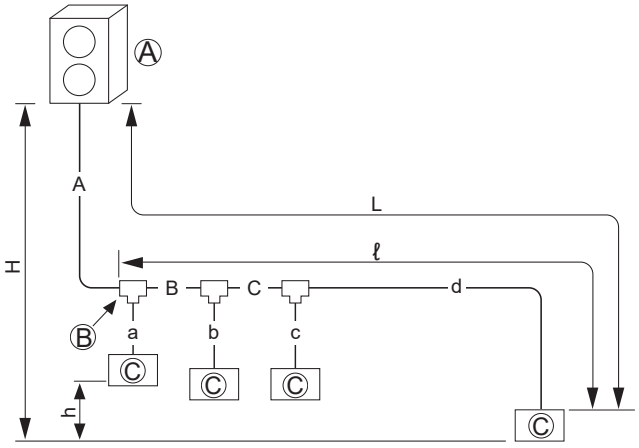

Ⓐ Outdoor Unit
Ⓑ First Branch
Ⓒ Indoor unit

Permissible Length	Total Piping Length	A+B+C+a+b+c+d ≤ 492 ft [150 m]
	Farthest Piping Length (L)	A+B+C+d ≤ 262 ft [80 m]
	Farthest Piping Length After First Branch (ℓ)	B+C+d ≤ 98 ft [30 m]
Permissible High/Low Difference	High/Low Difference in Indoor/Outdoor Section (H)	164 ft [50 m] (If the outdoor unit is lower, 131 ft [40 m])
	High/Low Difference in Indoor/Indoor Section (h)	49 ft [15 m]
■ **Selecting the Refrigerant Branch Kit**		Use an optional branch piping kit (CMY-Y62-G-E).

■ **Select Each Section of Refrigerant Piping**

(1) Section From Outdoor Unit to First Branch (A)
(2) Sections From Branch to Indoor Unit (a,b,c,d)
(3) Section From Branch to Branch (B,C)
} Each Section of Piping

Select the size from the table to the right.

(1) Refrigerant Piping Diameter In Section From Outdoor Unit to First Branch (Outdoor Unit Piping Diameter)

Model	Piping Diameter (inch[mm])	
MXZ-SM60	Liquid Line	3/8 [ø9.52]
	Gas Line	3/4 [ø19.05]

(2) Refrigerant Piping Diameter In Section From Branch to Indoor Unit (Indoor Unit Piping Diameter)

Model number	Piping Diameter (inch[mm])	
18 or lower	Liquid Line	1/4 [ø6.35]
	Gas Line	1/2 [ø12.7]
24 o54	Liquid Line	3/8 [ø9.52]
	Gas Line	5/8 [ø15.88]
72	Liquid Line	3/8 [ø9.52]
	Gas Line	3/4 [ø19.05]

(3) Refrigerant Piping Diameter In Section From Branch to Branch

Liquid Line (inch[mm])	Gas Line (inch[mm])
3/8 [ø9.52]	3/4 [ø19.05]

■ **Additional refrigerant charge**

Refrigerant for the extended piping is not included in the outdoor unit when the unit is shipped from the factory. Therefore, charge each refrigerant piping system with additional refrigerant at the installation site. In addition, in order to carry out service, enter the size and length of each liquid pipe and additional refrigerant charge amounts in
the spaces provided on the "Refrigerant amount" plate on the outdoor unit.

Calculation of additional refrigerant charge

- Calculate the additional charge using the liquid pipe size and length of the extended piping and total capacity of connected indoor units.
- Calculate the additional refrigerant charge using the procedure shown to the right, and charge with the additional refrigerant.
- For amounts less than 0.2 lb [0.1 kg], round up the calculated additional refrigerant charge.
  (For example, if the calculated charge is 13.2 lb [6.01 kg], round up the charge to 13.4 lb [6.1 kg].)
- The amount of additional refrigerant for MXZ-SM60 which is calculated from the total capacity of indoor units and the combination of extended pipes must not be over 28.4 lb[12.9kg].

<Additional Charge>
Calculation of refrigerant charge

Pipe size Liquid pipe ø6.35	+	Pipe size Liquid pipe ø9.52	+
[ft] × 0.29 [oz/ft] (m) × 27.0 (g/m)		[ft] × 0.75 [oz/ft] (m) × 70.0 (g/m)	

Total capacity of connected indoor units	Amount for the indoor units
– 27 kBtu/h	53 oz (1.5 kg)
28 – 54 kBtu/h	88 oz (2.5 kg)
55 – 78 kBtu/h	106 oz (3.0 kg)

Included refrigerant amount when shipped from the factory

Included refrigerant amount
11 LBS. 4 OZ. (5.1 kg)

<Example>
Outdoor model : P60
Indoor 1 : P24 (24 kBtu/h)
2 : P15 (15 kBtu/h)
3 : P08 (8 kBtu/h)
4 : P06 (6 kBtu/h)

A : ø9.52 66 ft [20 m]
B : ø9.52 16 ft [5 m]
C : ø9.52 16 ft [5 m]
a : ø9.52 49 ft [15 m]
b : ø6.35 33 ft [10 m]
c : ø6.35 33 ft [10 m]
d : ø6.35 66 ft [20 m]
} At the conditions below:

The total length of each liquid line is as follows:
[3/8"] ø9.52 : A + B + C + a = 20 + 5 + 5 + 15 = 147 ft [45 m]
[1/4"] ø6.35 : b + c + d = 10 + 10 + 20 = 132 ft [40 m]
The total capacity of connected indoor unit is as follows:
24 + 15 + 08 + 06 = 53
<Calculation example>
Additional refrigerant charge

$$132\text{ ft} \times 0.29\text{ oz} + 147\text{ ft} \times 0.75\text{ oz} + 88\text{ oz} = 237\text{ oz}\left[40\times\frac{27.0}{1000} + 45\times\frac{70.0}{1000} + 2.5 = 6.8\text{ kg (rounded up)}\right]$$

Header-Branch Method
Connection Examples
(Connecting to 4 Indoor Units)

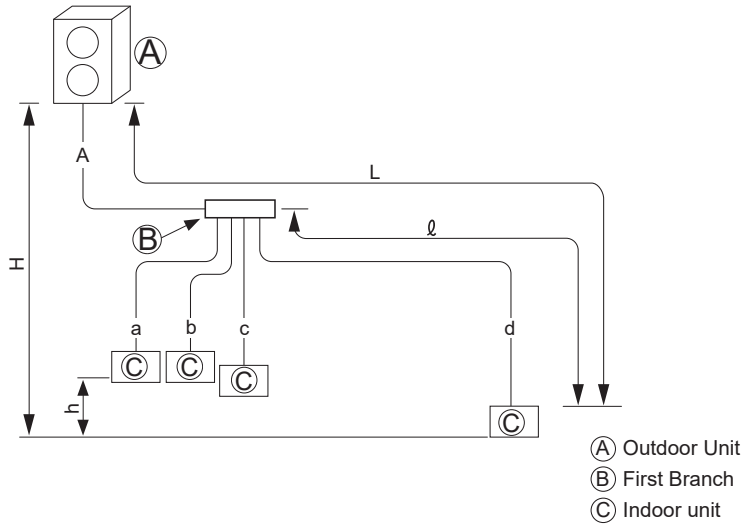

Permissible Length	Total Piping Length	A+a+b+c+d ≤ 492 ft [150 m]
	Farthest Piping Length (L)	A+d ≤ 262 ft [80 m]
	Farthest Piping Length After First Branch (ℓ)	d ≤ 98 ft [30 m]
Permissible High/ Low Difference	High/Low Difference in Indoor/Outdoor Section (H)	164 ft [50 m] (If the outdoor unit is lower, 131 ft [40 m])
	High/Low Difference in Indoor/Indoor Section (h)	49 ft [15 m]

■ **Selecting the Refrigerant Branch Kit**

Please select branching kit, which is sold separately, from the table below.
(The kit comprises sets for use with liquid pipes and for use with gas pipes.)

Branch header (4 branches)	Branch header (8 branches)
CMY-Y64-G-E	CMY-Y68-G-E

■ **Select Each Section of Refrigerant Piping**

(1) Section From Outdoor Unit to First Branch (A)
(2) Sections From Branch to Indoor Unit (a,b,c,d)
} Each Section of Piping

Select the size from the table to the right.

(1) Refrigerant Piping Diameter In Section From Outdoor Unit to First Branch (Outdoor Unit Piping Diameter)

Model	Piping Diameter (inch[mm])	
MXZ-SM60	Liquid Line	3/8 [ø9.52]
	Gas Line	3/4 [ø19.05]

(2) Refrigerant Piping Diameter In Section From Branch to Indoor Unit (Indoor Unit Piping Diameter)

Model number	Piping Diameter (inch[mm])	
18 or lower	Liquid Line	1/4 [ø6.35]
	Gas Line	1/2 [ø12.7]
24 to 54	Liquid Line	3/8 [ø9.52]
	Gas Line	5/8 [ø15.88]
72	Liquid Line	3/8 [ø9.52]
	Gas Line	3/4 [ø19.05]

(3) Refrigerant Piping Diameter In Section From Branch to Branch

Liquid Line (inch [mm])	Gas Line (inch [mm])
3/8 [ø9.52]	3/4 [ø19.05]

■ **Additional refrigerant charge**

Refer to the same section in the previous page.

Method of Combined Branching of Lines and Headers
Connection Examples
(Connecting to 5 Indoor Units)

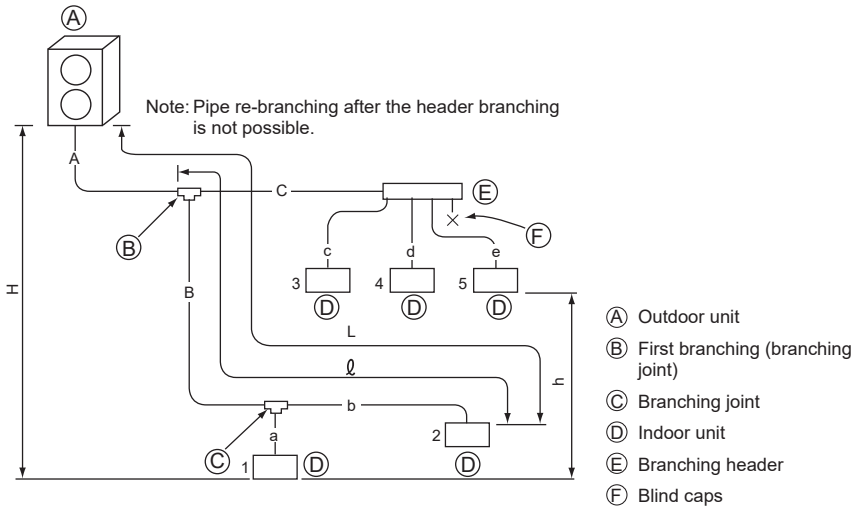

Permissible Length	Total Piping Length	A+B+C+a+b+c+d+e is 492 ft [150 m]
	Farthest Piping Length (L)	A+B+b is 262 ft [80 m]
	Farthest Piping Length After First Branch (ℓ)	B+b ≤ 98 ft [30 m]
Permissible High/Low Difference	High/Low Difference in Indoor/Outdoor Section (H)	164 ft [50 m] (If the outdoor unit is lower, 131 ft [40 m] or less)
	High/Low Difference in Indoor/Indoor Section (h)	49 ft [15 m]

■ **Selecting the Refrigerant Branch Kit**

Please select branching kit, which is sold separately, from the table below.
(The kit comprises sets for use with liquid pipes and for use with gas pipes.)

Branch Joint	Branch Header (4 branches)	Branch Header (8 branches)
CMY-Y62-G-E	CMY-Y64-G-E	CMY-Y68-G-E

■ **Select Each Section of Refrigerant Piping**

(1) Section From Outdoor Unit to First Branch (A)
(2) Sections From Branch to Indoor Unit (a,b,c,d,e)
(3) Section From Branch to Branch (B,C)
} Each Section of Piping

Select the size from the table to the right.

(1) Refrigerant Piping Diameter In Section From Outdoor Unit to First Branch (Outdoor Unit Piping Diameter)

Model	Piping Diameter (inch [mm])	
MXZ-SM60	Liquid Line	3/8 [ø9.52]
	Gas Line	3/4 [ø19.05]

(2) Refrigerant Piping Diameter In Section From Branch to Indoor Unit (Indoor Unit Piping Diameter)

Model number	Piping Diameter (inch [mm])	
18 or lower	Liquid Line	1/4 [ø6.35]
	Gas Line	1/2 [ø12.7]
24 to 54	Liquid Line	3/8 [ø9.52]
	Gas Line	5/8 [ø15.88]
72	Liquid Line	3/8 [ø9.52]
	Gas Line	3/4 [ø19.05]

(3) Refrigerant Piping Diameter In Section From Branch to Branch

Liquid Line (inch [mm])	Gas Line (inch [mm])
3/8 [ø9.52]	3/4 [ø19.05]

■ **Additional refrigerant charge**

Refer to the same section in the previous page.

Branch box Method
Connection Examples
(Connecting to 8 Indoor Units)

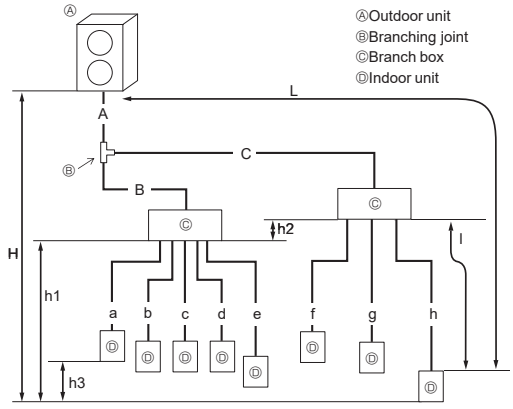

Permissible length (One-way)	Total piping length	A + B + C + a + b + c + d + e + f + g + h ≤ 492 ft [150 m]
	Farthest piping length (L)	A + C + h ≤ 262 ft [80 m]
	Piping length between outdoor unit and branch boxes	A + B + C ≤ 180 ft [55m]
	Farthest piping length after branch box (l)	l ≤ 82 ft [25 m]
	Total piping length between branch boxes and indoor units	a + b + c + d + e + f + g + h ≤ 312 ft [95 m]
Permissible height difference (One-way)	In indoor/outdoor section (H)*1	H ≤ 164 ft [50 m] (In the case of that outdoor unit is set higher than indoor unit)
		H ≤ 131 ft [40 m] (In the case of that outdoor unit is set lower than indoor unit)
	In branch box/indoor unit section (h1)	h1 + h2 ≤ 49 ft [15 m]
	In each branch unit (h2)	h2 ≤ 49 ft [15 m]
	In each indoor unit (h3)	h3 ≤ 39 ft [12 m]
Number of bends		≤ 15

*1 Branch box should be placed within the level between the outdoor unit and indoor units.

■ **Select Each Section of Refrigerant Piping**

(1) Section From Outdoor Unit to Branch box (A, B, C)
(2) Sections From Branch box to Indoor Unit (a to h)
} Each Section of Piping

Select the size from the table to the right.

(1) Refrigerant Piping Diameter In Section From Outdoor Unit to Branch box (Outdoor Unit Piping Diameter)

Model	Piping Diameter (inch[mm])	
MXZ-SM36/42/48	Liquid Line	3/8 [ø9.52]
	Gas Line	5/8 [ø15.88]
MXZ-SM60	Liquid Line	3/8 [ø9.52]
	Gas Line	3/4 [ø19.05]

(2) Refrigerant Piping Diameter In Section From Branch box to Indoor Unit (Indoor Unit Piping Diameter)

Indoor unit series	Model number	A Liquid pipe (inch[mm])	B Gas pipe (inch[mm])
M series or S series	– 12	1/4 [ø6.35]	3/8 [ø9.52]
	15,18		1/2 [ø12.7]
	24 –	3/8 [ø9.52]	5/8 [ø15.88]
P series	– 18	1/4 [ø6.35]	1/2 [ø12.7]
	24 –	3/8 [ø9.52]	5/8 [ø15.88]

When both of following bullet are satisfied gas piping diagram size shall be increased by one size.
• Indoor units which connected are all of A-COIL type (PAA-A).
• Total piping length is 33 ft (10 m) or less.

■ **Additional refrigerant charge**

Refer to the constraint below and the same section in the previous page.
• When connecting a PAA-series unit(s). set additional constraints on the amount of additional refrigerant as follow.

Number of connecting PAA-A •A	MXZ-SM36/42/48	MXZ-SM60
1 unit	7.7 kg 27 1oz	11.2 kg 395 oz
2 units	6.7 kg 236 oz	10.2 kg 359 oz
3 units	6.7 kg 236 oz	9.7 kg 342 oz

10-2. PRECAUTIONS AGAINST REFRIGERANT LEAKAGE

10-2-1. Introduction

R410A refrigerant of this air conditioner is non-toxic and non-flammable but leaking of large amount from an indoor unit into the room where the unit is installed may be deleterious. To prevent possible injury, the rooms should be large enough to keep the R410A concentration specified by ISO 5149-1 as follows.

Maximum concentration
Maximum refrigerant concentration of R410A of a room is 0.44kg/m³ accordance with ISO 5149-1.
To facilitate calculation, the maximum concentration is expressed in units of kg/m³ [lbs/ft³] (kg [lbs] of R410A per m³ [ft³])

Maximum concentration of R410A: 0.027 lbs/ft³ [0.44 kg/m³]

(ISO 5149-1)

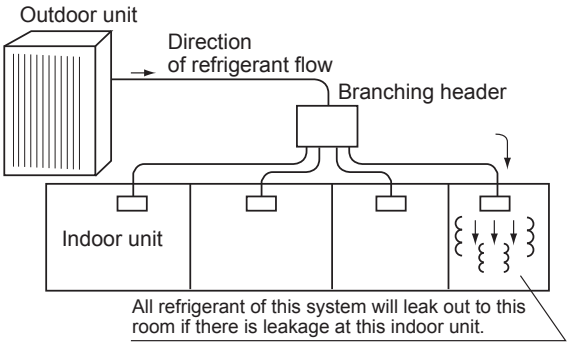

10-2-2. Confirming procedure of R410A concentration

Follow (1) to (3) to confirm the R410A concentration and take appropriate treatment, if necessary.

(1) Calculate total refrigerant amount by each refrigerant system. Total refrigerant amount is precharged refrigerant at ex-factory plus additional charged amount at field installation.

Note:
When the air conditioning system consists of several independent refrigerant system, figure out the total refrigerant amount by each independent refrigerant system.

(2) Calculate room volumes (m³) and find the room with the smallest volume

The part with ☐ represents the room with the smallest volume.

(a) Situation in which there are no partitions

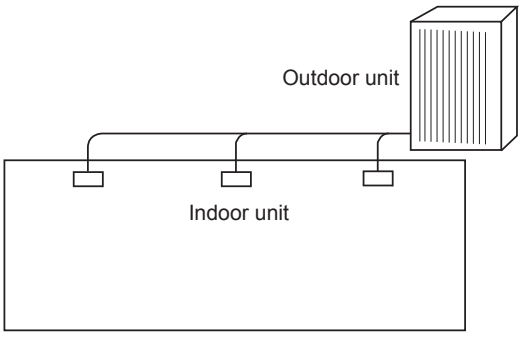

(b) There are partitions, but there are openings that allow the effective mixing of air.

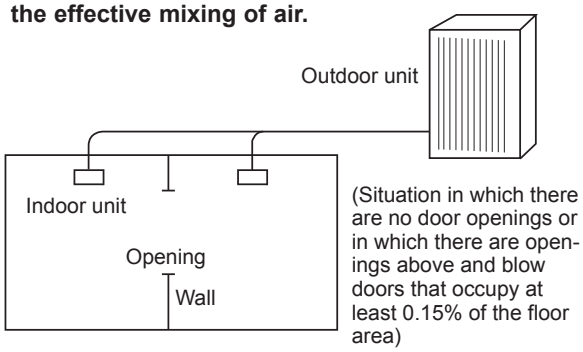

(c) If the smallest room has mechanical ventilation apparatus that is linked to a household gas detection and alarm device, the calculations should be performed for the second smallest room.

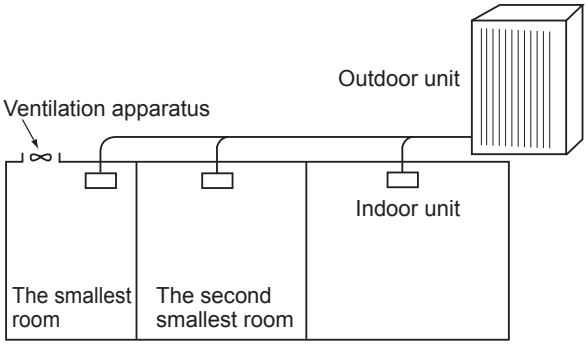

(3) Use the results of calculations (1) and (2) to calculate the refrigerant concentration:

$$\frac{\text{Total refrigerant in the refrigerating unit (lbs [kg])}}{\text{The smallest room in which an indoor unit has been installed (ft}^3\text{ [m}^3\text{])}} \leq \text{Maximum concentration(lbs/ft}^3\text{ [kg/m}^3\text{])}$$

Maximum concentration of R410A:0.027 lbs/ft³ [0.44kg/m³]

If the calculation results do not exceed the maximum concentration, perform the same calculations for the larger second and third room, etc., until it has been determined that nowhere the maximum concentration will be exceeded.

11 DISASSEMBLY PROCEDURE

MXZ-SM36NAM2-U1 MXZ-SM48NAM2-U1

→ : Indicates the visible parts in the photos/figures.

Note: Turn OFF the power supply before disassembly.

OPERATING PROCEDURE

1. Removing the service panel and top panel

(1) Remove 3 service panel fixing screws (5 × 12) and slide the hook on the right downward to remove the service panel.

(2) Remove screws (2 for front, 3 for rear/5 × 12) of the top panel and remove it.

PHOTOS/FIGURES

Photo 1

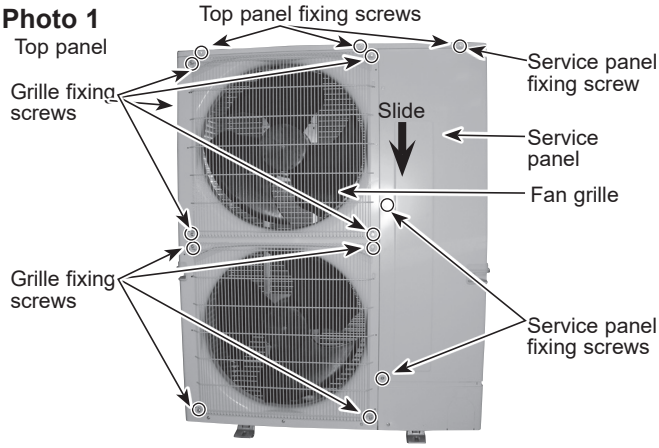

2. Removing the fan motor (MF1, MF2)

(1) Remove the service panel. (See Photo 1)

(2) Remove the top panel. (See Photo 1)

(3) Remove 4 fan grille fixing screws (5 × 12) to detach the fan grille. (See Photo 1)

(4) Remove a nut (for right handed screw of M6) to detach the propeller. (See Photo 2)

(5) Disconnect the connectors, CNF1 and CNF2 on multi controller circuit board in electrical parts box.

(6) Remove 4 fan motor fixing screws (5 × 20) to detach the fan motor. (See Photo 3)

Note: Tighten the propeller fan with a torque of 5.7 ± 0.3 N·m [4.2 ± 0.2 ft = lbs]

Photo 2

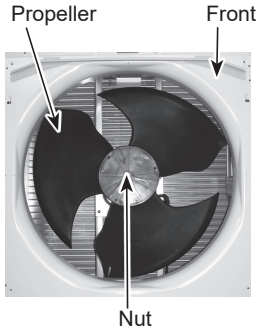

Photo 3

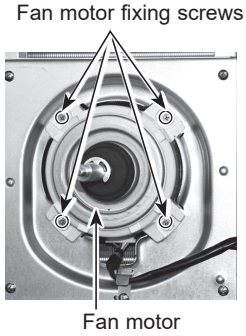

3. Removing the electrical parts box

(1) Remove the service panel. (See Photo 1)

(2) Remove the top panel. (See Photo 1)

(3) Disconnect the connecting wire from terminal block.

(4) Remove all the following connectors from multi controller circuit board;

<Diagram symbol in the connector housing>

- Fan motor (CNF1, CNF2)
- Thermistor <HIC pipe> (TH2)
- Thermistor <Outdoor liquid pipe> (TH3)
- Thermistor <Compressor> (TH4)
- Thermistor <Suction pipe/Ambient, Outdoor> (TH7/6)
- High pressure switch (63H)
- High pressure sensor (63HS)
- Low pressure sensor (63LS)
- 4-way valve (21S4)
- Bypass valve (SV1)
- Linear expansion valve (LEV-A, LEV-B)

Pull out the disconnected wire from the electrical parts box.

(5) Remove the terminal cover and disconnect the compressor lead wire from the comp. terminal. (See Figure 1)

Note: The terminal cover can be easily removed by using a blade of flathead screwdriver.

Figure 1

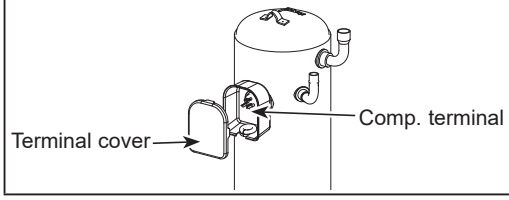

Photo 4

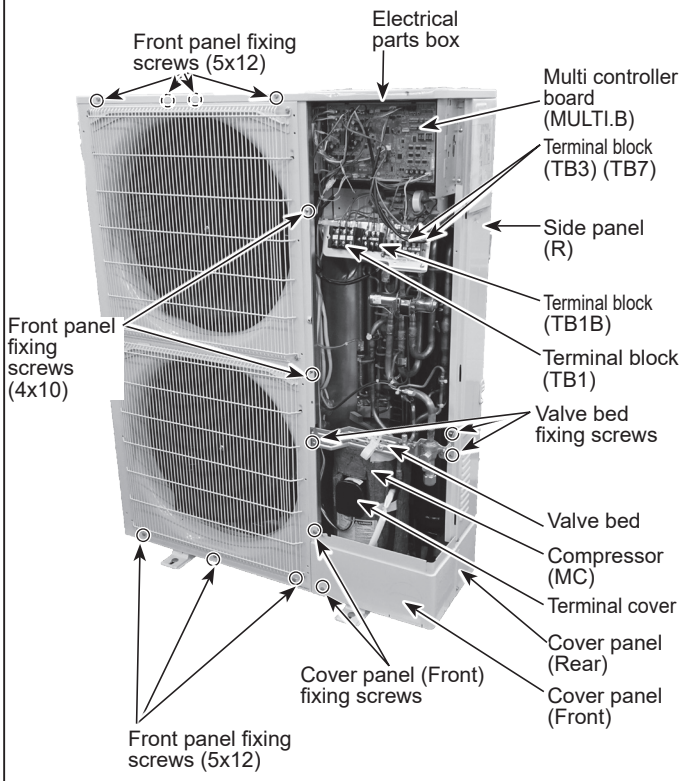

Continue to the next page.

From the previous page.

OPERATING PROCEDURE	PHOTOS/FIGURES
(6) Remove 2 electrical parts box fixing screws (4 × 10) and detach the electrical parts box by pulling it upward. The electrical parts box is fixed with 2 hooks on the left and 1 hook on the right.	**Photo 5** 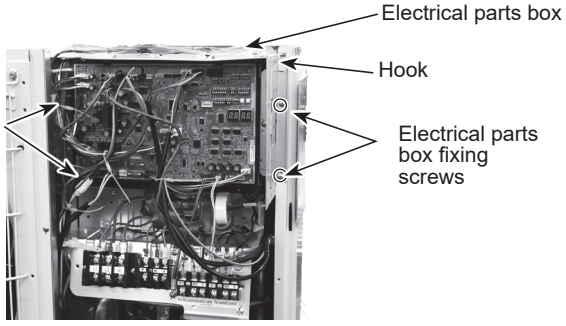
4. Removing the thermistor <Suction pipe> (TH6) (1) Remove the service panel. (See Photo 1) (2) Remove the top panel. (See Photo 1) (3) Disconnect the connector, TH7/6 (red), on the multi controller circuit board in the electrical parts box. (4) Loosen the wire clamps on top of the electrical parts box. (5) Pull out the thermistor <Suction pipe> (TH6) from the sensor holder. (See Photo 7) **Note: When replacing thermistor <Suction pipe> (TH6), replace it together with thermistor <Ambient> (TH7) since they are combined together.** **Refer to procedure No.5 below to remove thermistor <Ambient> (TH7).**	**Photo 6** 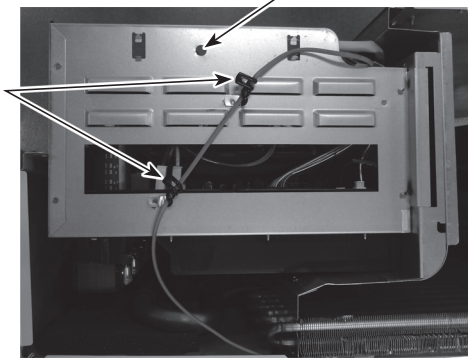
	Photo 7
5. Removing the thermistor <Ambient> (TH7) (1) Remove the service panel. (See Photo 1) (2) Remove the top panel. (See Photo 1) (3) Disconnect the connector TH7/6 (red) on the multi controller circuit board in the electrical parts box. (4) Loosen the wire clamps on top of the electrical parts box. (See Photo 6) (5) Pull out the thermistor <Ambient> (TH7) from the sensor holder. **Note: When replacing thermistor <Ambient> (TH7), replace it together with thermistor <Suction pipe> (TH6), since they are combined together.** **Refer to procedure No.4 above to remove thermistor <Suction pipe> (TH6).**	**Photo 8** 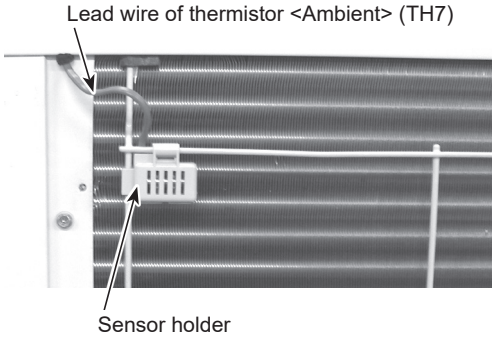

OPERATING PROCEDURE	PHOTOS/FIGURES
6. Removing the thermistor <Outdoor liquid pipe> (TH3) and thermistor <Compressor> (TH4), thermistor <HIC pipe> (TH2) (1) Remove the service panel. (See Photo 1) (2) Disconnect the connectors, TH3 (white) and TH4 (white), TH2 (black) on the multi controller circuit board in the electrical parts box. (3) Pull out the thermistor <Outdoor liquid pipe> (TH3) and thermistor <Compressor> (TH4) from the sensor holder. (See Photo 7 and 9)	**Photo 9** Thermistor <Outdoor liquid pipe> (TH3)
7. Removing the 4-way valve coil (21S4) (1) Remove the service panel. (See Photo 1) (2) Remove 4-way valve coil fixing screw (M5 × 7). (3) Remove the 4-way valve coil by sliding the coil to the right. (4) Disconnect the connector 21S4 (green) on the multi controller circuit board in the electrical parts box.	**Photo 10** 4-way valve coil (21S4) 4-way valve 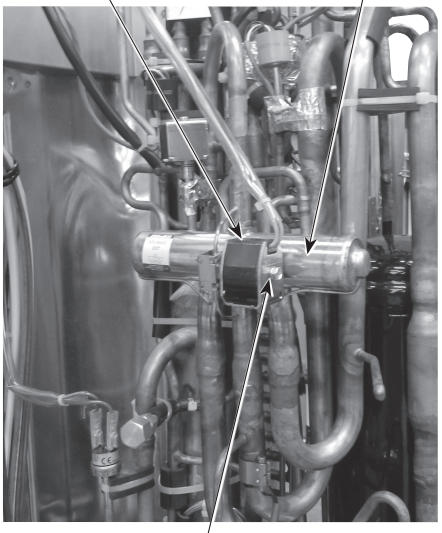 4-way valve coil fixing screw
8. Removing the 4-way valve (1) Remove the service panel. (See Photo 1) (2) Remove the top panel. (See Photo 1) (3) Remove the electrical parts box (See Photo 5) (4) Remove 3 valve bed fixing screws (4 × 10) and 4 ball valve and stop valve fixing screws (5 × 16), then remove the valve bed. (See Photo 4 and 7) (5) Remove 2 cover panel fixing screws (5 x 12), then slide the cover panel (front) upward to remove it. (The cover panel (front) is fixed to the cover panel (rear) with a hook on the rear side. (See Photo 4) (6) Remove the cover panel (rear) fixing screws (2 for right side and 2 for rear/ 5 x 12), then slide the cover panel (rear) upward to remove it. (The cover panel (rear) is fixed to the side panel (R) with 2 screws.) (7) Remove 3 side panel (R) fixing screws (5 × 12) in the rear of the unit, then slide the side panel (R) upward to remove it. (The side panel (R) is fixed to the side plate with hooks on the rear side.) (8) Remove the 4-way valve coil. (See Photo 10) (9) Recover refrigerant. (10) Remove the welded part of 4-way valve. **Notes:** **1. Recover refrigerant without spreading it in the air.** **2. The welded part can be removed easily by removing the side panel (R).** **3. When installing the 4-way valve, cover it with a wet cloth to prevent it from heating (248°F [120°C] or more), then braze the pipes so that the inside of pipes are not oxidized.**	

OPERATING PROCEDURE	PHOTOS/FIGURES

9. Removing bypass valve coil (SV1) and bypass valve

(1) Remove the service panel. (See Photo 1)
(2) Remove the top panel. (See Photo 1)
(3) Remove the cover panel (front). (Refer to procedure 8 (5))
(4) Remove the cover panel (rear). (Refer to procedure 8 (6))
(5) Remove the side panel (R). (Refer to procedure 8 (7))
(6) Remove the bypass valve coil fixing screw (M4 × 6).
(7) Remove the bypass valve coil by sliding the coil upward.
(8) Disconnect the connector SV1 (gray) on the multi controller circuit board in the electrical parts box.
(9) Remove the electrical parts box. (See Photo 5)
(10) Recover refrigerant.
(11) Remove the welded part of bypass valve.
Refer to the notes below.

10. Removing the high pressure switch (63H) and high pressure sensor (63HS)

(1) Remove the service panel. (See Photo 1)
(2) Remove the top panel. (See Photo 1)
(3) Remove the cover panel (front). (Refer to procedure 8 (5))
(4) Remove the cover panel (rear). (Refer to procedure 8 (6))
(5) Remove the side panel (R). (Refer to procedure 8 (7))
(6) Pull out the lead wire of high pressure switch and high pressure sensor.
(7) Remove the electrical parts box. (See Photo 5)
(8) Recover refrigerant.
(9) Remove the welded part of high pressure switch and high pressure sensor.
Refer to the notes below.

11. Removing the low pressure sensor (63LS)

(1) Remove the service panel. (See Photo 1)
(2) Remove the top panel. (See Photo 1)
(3) Remove the cover panel (front). (Refer to procedure 8 (5))
(4) Remove the cover panel (rear). (Refer to procedure 8 (6))
(5) Remove the side panel (R). (Refer to procedure 8 (7))
(6) Disconnect the connector 63LS (blue) on the multi controller circuit board in the electrical parts box.
(7) Remove the electrical parts box. (See Photo 5)
(8) Recover refrigerant.
(9) Remove the welded part of low pressure sensor.
Refer to the notes below.

12. Removing linear expansion valve (LEV-A, LEV-B)

(1) Remove the service panel. (See Photo 1)
(2) Remove the top panel. (See Photo 1)
(3) Remove the cover panel (front). (Refer to procedure 8 (5))
(4) Remove the cover panel (rear). (Refer to procedure 8 (6))
(5) Remove the side panel (R). (Refer to procedure 8 (7))
(6) Remove the linear expansion valve coil. (See Photo 11,12)
(7) Remove the electrical parts box. (See Photo 5)
(8) Recover refrigerant.
(9) Remove the welded part of linear expansion valve.
Refer to the notes on the right.

Photo 11

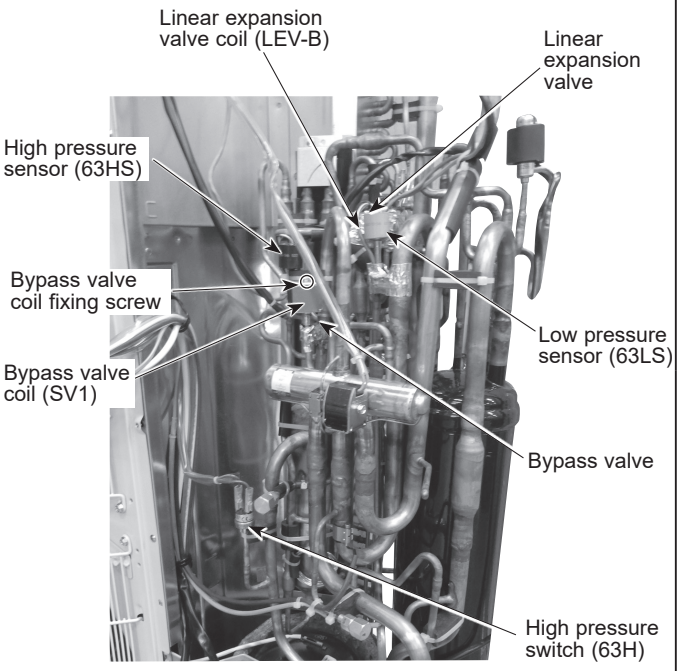

Photo 12

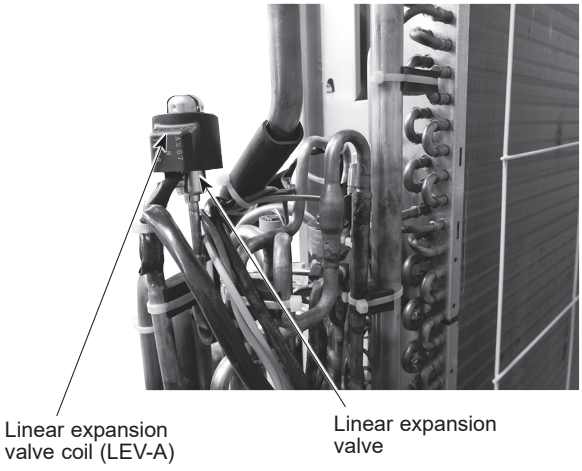

Notes:
1. **Recover refrigerant without spreading it in the air.**
2. **The welded part can be removed easily by removing the side panel (R).**
3. **When installing the following parts, cover it with a wet cloth to prevent it from heating as the temperature below, then braze the pipes so that the inside of pipes are not oxidized;**

- **Bypass valve (procedure 9), 248°F [120°C] or more**
- **High pressure switch and high pressure sensor (procedure 10), 212°F [100°C] or more**
- **Low pressure sensor (procedure 11), 212°F [100°C] or more**
- **LEV (procedure 12), 248°F [120°C] or more**

OPERATING PROCEDURE	PHOTOS/FIGURES
13. Removing the compressor (MC) (1) Remove the service panel. (See Photo 1) (2) Remove the top panel. (See Photo 1) (3) Remove the cover panel (front). (Refer to procedure 8(5)) (4) Remove the cover panel (rear) (Refer to procedure 8(6)) (5) Remove the side panel (R). (Refer to procedure 8 (7)) (6) Remove 2 front cover panel fixing screws (5 × 12) and remove the cover panel (front). (See Photo 4) (7) Remove the electrical parts box. (See Photo 5) (8) Remove the valve bed. (Refer to procedure 8 (4)) (9) Remove 3 separator fixing screws (4 × 10) and remove the separator. (See Figure 2) (10) Remove the comp felt covering the compressor, and remove the thermistor <Compressor> (TH4), thermal protector (TRS), and the lead wires. (See Photo 7 and 13) (11) Recover refrigerant. (12) Remove the 3 compressor fixing nuts for motor using spanner or adjustable wrench. (13) Remove the welded pipe of compressor inlet and outlet and then remove the compressor. **Note: Recover refrigerant without spreading it in the air.**	**Photo 13** 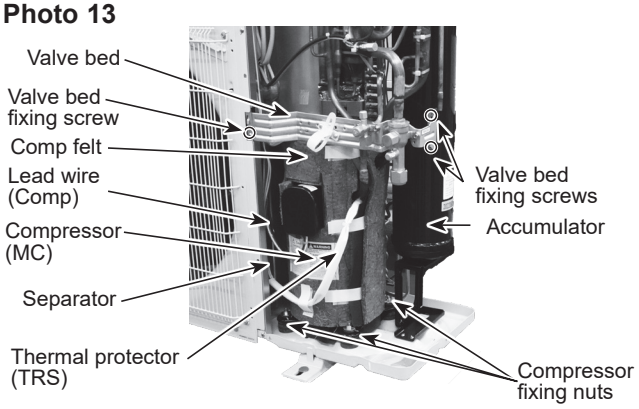 **Figure 2** 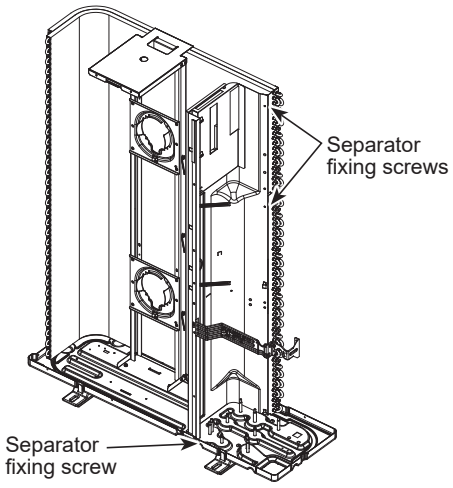
14. Removing the accumulator (1) Remove the service panel. (See Photo 1) (2) Remove the top panel. (See Photo 1) (3) Remove the cover panel (front). (Refer to procedure 8 (5)) (4) Remove the cover panel (rear). (Refer to procedure 8 (6)) (5) Remove the side panel (R). (Refer to procedure 8 (7)) (6) Remove the electrical parts box. (See Photo 5) (7) Remove the valve bed. (Refer to procedure 8 (4)) (8) Recover refrigerant. (9) Remove 4 welded pipes of accumulator inlet and outlet. (10) Remove 2 accumulator leg fixing screws (4 × 10). (See Photo 15) **Note: Recover refrigerant without spreading it in the air.**	**Photo 14** 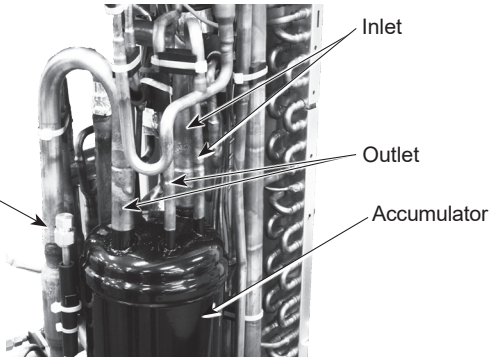 **Photo 15** 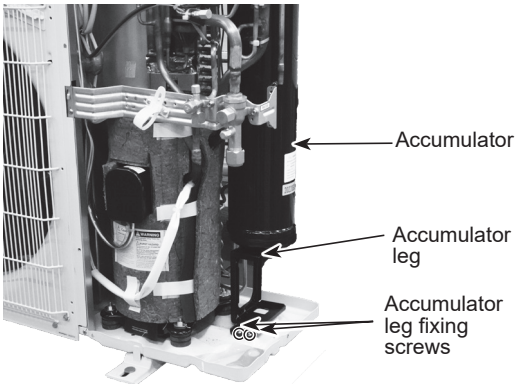

OPERATING PROCEDURE	PHOTOS/FIGURES
15. Removing the reactor (DCL) (1) Remove the service panel. (See Photo 1) (2) Remove the top panel. (See Photo 1) (3) Remove the electrical parts box (See photo 5) (4) Remove 6 screws (4 x 10) for reactors to remove the reactors. (See Figure 3)	**Figure 3** 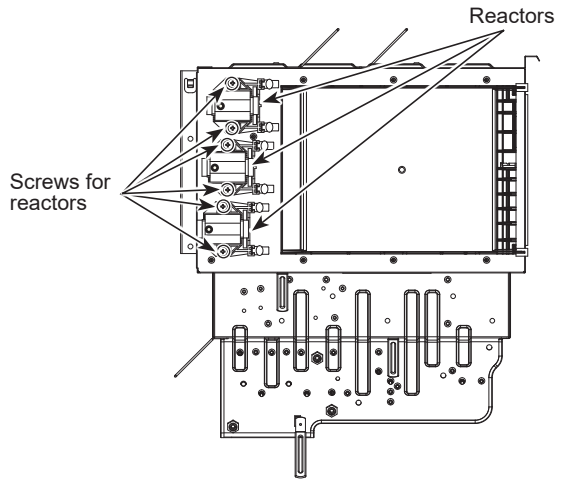
16. Changing the fusible plug See the following descriptions. • Be careful not to expose the fusible plug to the braze torch flame or transfer heat to it. (See Photo 16) • The temperature of the fusibleplug must not become 140°F (60°C) or more while working. Protect the fusible plug with a wet cloth when necessary. (The fusible plug breaks at 158°F [70°C]). • Tighten the screw in 14 - 18 N·m* (11-13 lbf·ft) with 2 wrenches. *1 N·m ≈ 10 kgf·cm	**Photo 16** 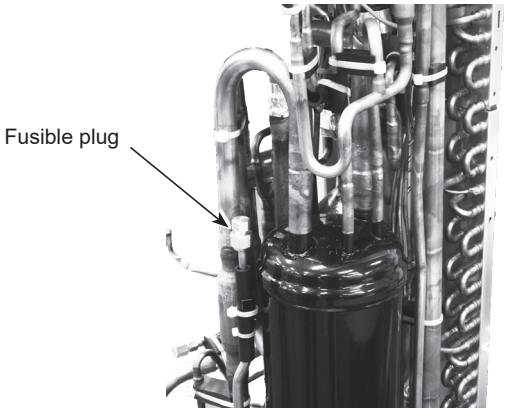

OPERATING PROCEDURE	PHOTOS/FIGURES
17. Removing the thermal protector (TRS)) (1) Remove the service panel. (See Photo 1) (2) Remove the cover panel front. (See Photo 1) (3) Pull out the lead wire of high pressure switch and discon nect the connector, 63H (yellow) from the multi controller board in the electrical parts box. (See Photo 11) (4) Remove the comp felt covering the compressor. (See Photo 13) (5) Loosen the clamp or band for the lead wire of the electrical parts box and separator. (6) Pull out the thermal protector (TRS) from the holder. (See Photo 17)	**Photo 17**
18. Removing the fuse holders (1) Remove the service panel. (See photo 1) (2) Remove the fuse covers. (See Figure 4) (3) Remove 2 screws (3 x 12) for fuse holders to remove the fuse holders. (See Figure 4 and Photo 18) Notes: 1. Bracket, circuit board and other parts can get deformed when inserting and removing the fuse cover. 2. Remove the fuse cover in the way that surrounding parts will not be affected.	**Photo 18** 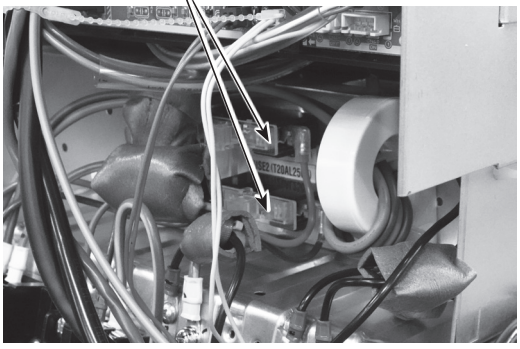 **Figure 4** 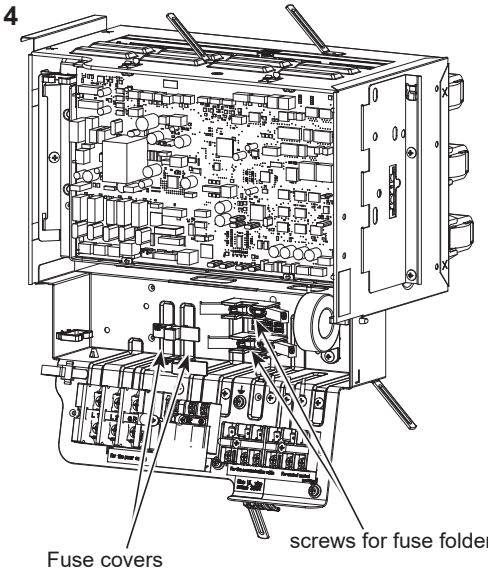

MXZ-SM60NAM2-U1

→ : Indicates the visible parts in the photos/figures.

Note: Turn OFF the power supply before disassembly.

OPERATING PROCEDURE	PHOTOS/FIGURES
1. Removing the service panel and top panel (1) Remove 3 service panel fixing screws (5 × 12) and slide the hook on the right downward to remove the service panel. (2) Remove screws (2 for front, 3 for rear/5 × 12) of the top panel and remove it.	**Photo 1** 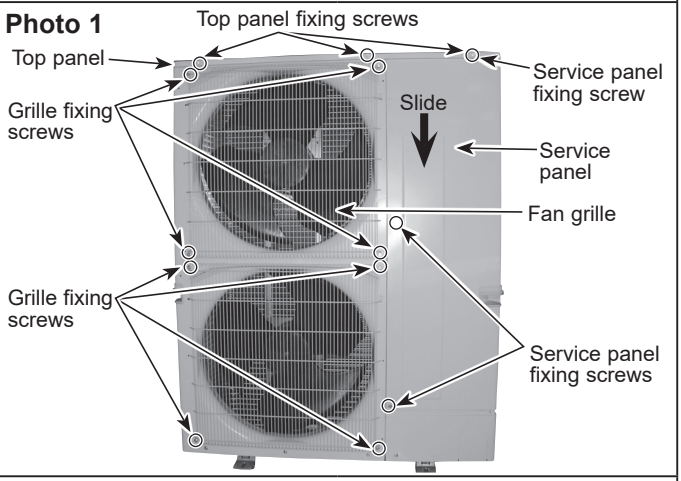
2. Removing the fan motor (MF1, MF2) (1) Remove the service panel. (See Photo 1) (2) Remove 4 fan grille fixing screws (5 × 12) to detach the fan grille. (See Photo 1) (3) Remove a nut (for right handed screw of M6) to detach the propeller. (See Photo 2) (4) Disconnect the connectors, CNF1 and CNF2 on multi controller board in electrical parts box. (5) Remove 4 fan motor fixing screws (5 × 20) to detach the fan motor. (See Photo 3) **Note: Tighten the propeller fan with a torque of 5.7 ± 0.3 N·m [4.2 ± 0.2 ft = lbs]**	**Photo 2** 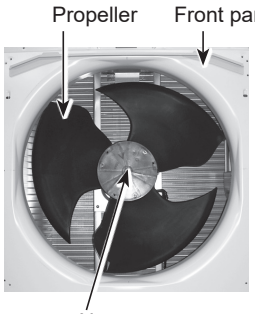 **Photo 3** 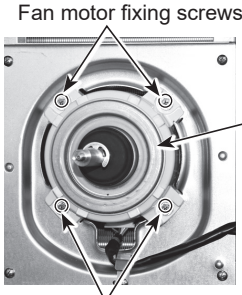
3. Removing the electrical parts box (1) Remove the service panel. (See Photo 1) (2) Remove the top panel. (See Photo 1) (3) Disconnect the connecting wire from terminal block. (See Photo 5) (4) Remove all the following connectors from outdoor multi controller circuit board; <Diagram symbol in the connector housing> • Fan motor (CNF1, CNF2) • Thermistor <HIC pipe> (TH2) • Thermistor <Outdoor liquid pipe> (TH3) • Thermistor <Compressor> (TH4) • Thermistor <Suction pipe/Ambient, Outdoor> (TH7/6) • High pressure switch (63H) • High pressure sensor (63HS) • Low pressure sensor (63LS) • 4-way valve (21S4) • Bypass valve (SV1) • Linear expansion valve (CNLVA/CNLVB) Pull out the disconnected wire from the electrical parts box. (5) Remove the terminal cover and disconnect the compressor lead wire. **Note: The terminal cover can be easily removed by using a blade of flathead screwdriver.** **Figure 1** 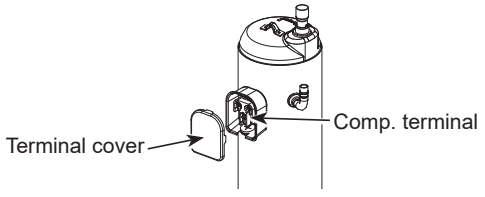 	**Photo 4** 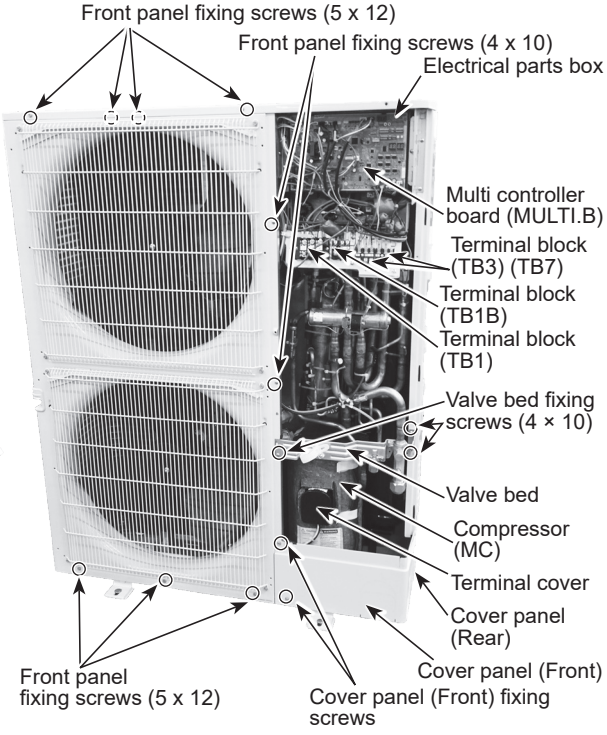

Continue to the next page.

From the previous page.

OPERATING PROCEDURE	PHOTOS/FIGURES
(6) Remove 2 electrical parts box fixing screws (4 × 10) then detach the electrical parts box by pulling it upward. The electrical parts box is fixed with 2 hooks on the left and 1 hook on the right.	**Photo 5** 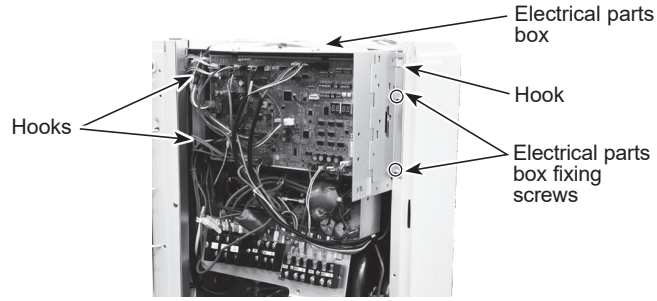
4. Removing the thermistor <Suction pipe> (TH6) (1) Remove the service panel. (See Photo 1) (2) Remove the top panel. (See Photo 1) (3) Disconnect the connectors, TH7/6 (red), on the multi controller circuit board in the electrical parts box. (4) Loosen the wire clamps on the back of electrical parts box. (5) Pull out the thermistor <Suction pipe> (TH6) from the sensor holder. (See Photo 7) **Note: When replacing thermistor <Suction pipe> (TH6), replace it together with thermistor <Ambient> (TH7) since they are combined together. Refer to procedure No.5 below to remove thermistor <Ambient> (TH7).**	**Photo 6** 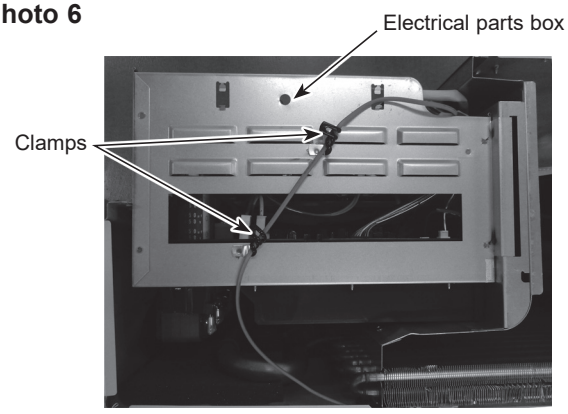
5. Removing the thermistor <Ambient> (TH7) (1) Remove the service panel. (See Photo 1) (2) Remove the top panel. (See Photo 1) (3) Disconnect the connector TH7/6 (red) on the multi controller circuit board in the electrical parts box. (4) Loosen the wire clamps on top of the electrical parts box. (See Photo 6.) (5) Pull out the thermistor <Ambient> (TH7) from the sensor holder. **Note: When replacing thermistor <Ambient> (TH7), replace it together with thermistor <Suction pipe> (TH6), since they are combined together. Refer to procedure No.4 above to remove thermistor <Suction pipe> (TH6).**	**Photo 7** 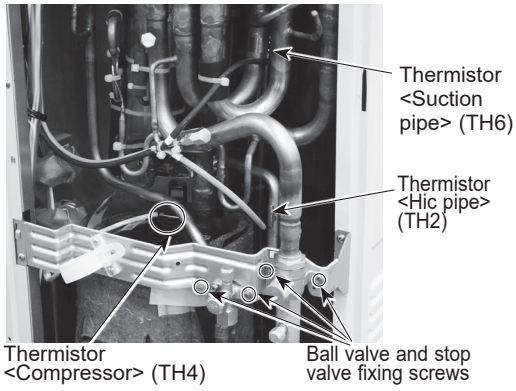
	Photo 8 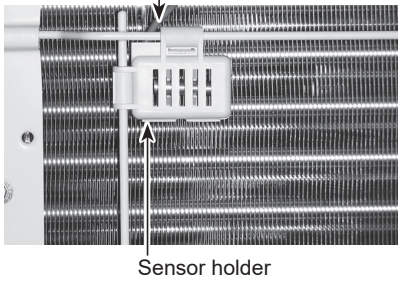

OPERATING PROCEDURE	PHOTOS/FIGURES
6. Removing the thermistor <Outdoor liquid pipe> (TH3) and thermistor <Compressor> (TH4), thermistor <HIC pipe> (TH2) (1) Remove the service panel. (See Photo 1) (2) Disconnect the connectors, TH3 (white) and TH4 (white), TH2 (black) on the multi controller circuit board in the electrical parts box. (3) Pull out the thermistor <Outdoor liquid pipe> (TH3) and thermistor <Compressor> (TH4) from the sensor holder. (See Photo 9-1 and 9-2)	**Photo 9-1** 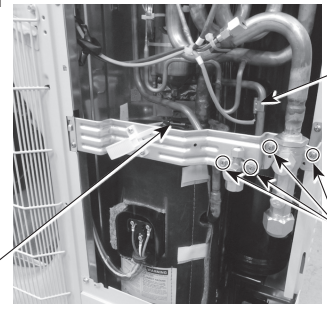 **Photo 9-2** 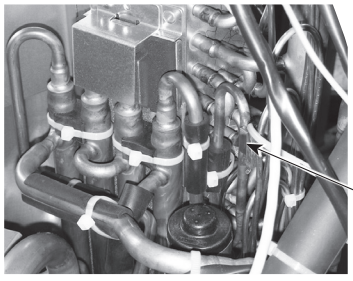
7. Removing the 4-way valve coil (21S4) (1) Remove the service panel. (See Photo 1) (2) Remove 4-way valve coil fixing screw (M5 × 7). (3) Remove the 4-way valve coil by sliding the coil to the right. (4) Disconnect the connector 21S4 (green) on the multi controller circuit board in the electrical parts box.	**Photo 10** 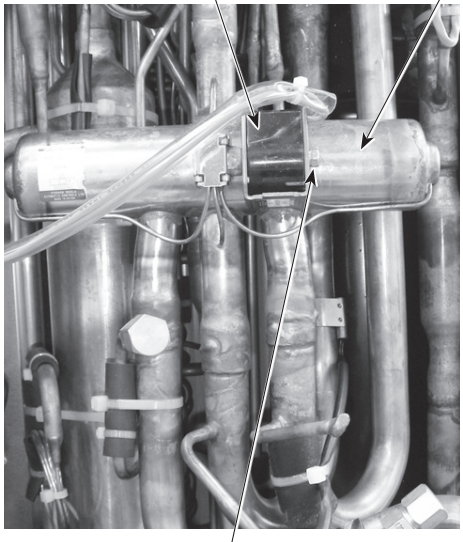
8. Removing the 4-way valve (1) Remove the service panel. (See Photo 1) (2) Remove the top panel. (See Photo 1) (3) Remove the electrical parts box (See Photo 5) (4) Remove 3 valve bed fixing screws (4 × 10) and 4 ball valve and stop valve fixing screws (5 × 16), then remove the valve bed. (See Photo 4 and 7) (5) Remove 2 cover panel fixing screws (5 x 12), then slide the cover panel (front) upward to remove it. (The cover panel (front) is fixed to the cover panel (rear) with a hook on the rear side. (See Photo 4) (6) Remove the cover panel (rear) fixing screws (2 for right side and 2 for rear/ 5 x 12), then slide the cover panel (rear) upward to remove it. (The cover panel (rear) is fixed to the side panel (R) with 2 screws.) (7) Remove 3 side panel (R) fixing screws (5 × 12) in the rear of the unit, then slide the side panel (R) upward to remove it. (The side panel (R) is fixed to the side plate with hooks on the rear side.) (8) Remove the 4-way valve coil. (See Photo 10) (9) Recover refrigerant. (10) Remove the welded part of 4-way valve. **Notes:** **1. Recover refrigerant without spreading it in the air.** **2. The welded part can be removed easily by removing the side panel (R).** **3. When installing the 4-way valve, cover it with a wet cloth to prevent it from heating (248°F [120°C] or more), then braze the pipes so that the inside of pipes are not oxidized.**	

OPERATING PROCEDURE	PHOTOS/FIGURES

9. Removing bypass valve coil (SV1) and bypass valve

(1) Remove the service panel. (See Photo 1)
(2) Remove the top panel. (See Photo 1)
(3) Remove the cover panel (front). (Refer to procedure 8(5))
(4) Remove the cover panel (rear) (Refer to procedure 8(6))
(5) Remove the side panel (R). (Refer to procedure 8 (7))
(6) Remove the bypass valve coil fixing screw (M4 × 6).
(7) Remove the bypass valve coil by sliding the coil upward.
(8) Disconnect the connector SV1 (gray) on the multi controller circuit board in the electrical parts box.
(9) Remove the electrical parts box. (See Photo 5)
(10) Recover refrigerant.
(11) Remove the welded part of bypass valve.
Refer to the notes below.

10. Removing the high pressure switch (63H) and high pressure sensor (63HS)

(1) Remove the service panel. (See Photo 1)
(2) Remove the top panel. (See Photo 1)
(3) Remove the cover panel (front). (Refer to procedure 8(5))
(4) Remove the cover panel (rear) (Refer to procedure 8(6))
(5) Remove the side panel (R). (Refer to procedure 8 (7))
(6) Pull out the lead wire of high pressure switch and high pressure sensor.
(7) Remove the electrical parts box. (See Photo 5)
(8) Recover refrigerant.
(9) Remove the welded part of high pressure switch and high pressure sensor.
Refer to the notes below.

Photo 11

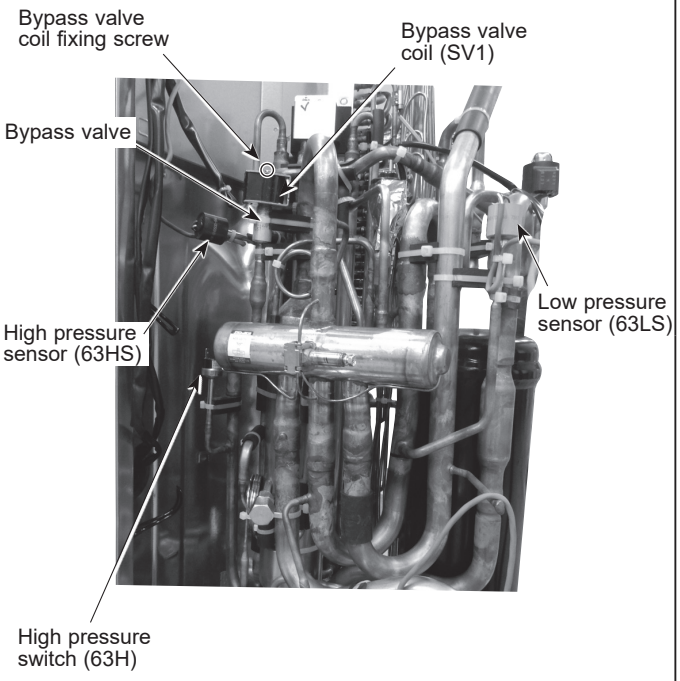

11. Removing the low pressure sensor (63LS)

(1) Remove the service panel. (See Photo 1)
(2) Remove the top panel. (See Photo 1)
(3) Remove the cover panel (front). (Refer to procedure 8(5))
(4) Remove the cover panel (rear) (Refer to procedure 8(6))
(5) Remove the side panel (R). (Refer to procedure 8 (7))
(6) Disconnect the connector 63LS (blue) on the multi controller circuit board in the electrical parts box.
(7) Remove the electrical parts box. (See Photo 5)
(8) Recover refrigerant.
(9) Remove the welded part of low pressure sensor.
Refer to the notes below.

12. Removing linear expansion valve (LEV-A, LEV-B)

(1) Remove the service panel. (See Photo 1)
(2) Remove the top panel. (See Photo 1)
(3) Remove the cover panel (front). (Refer to procedure 8(5))
(4) Remove the cover panel (rear) (Refer to procedure 8(6))
(5) Remove the side panel (R). (Refer to procedure 8 (7))
(6) Remove the linear expansion valve coil. (See Photo 12)
(7) Remove the electrical parts box. (See Photo 5)
(8) Recover refrigerant.
(9) Remove the welded part of linear expansion valve.

Photo 12

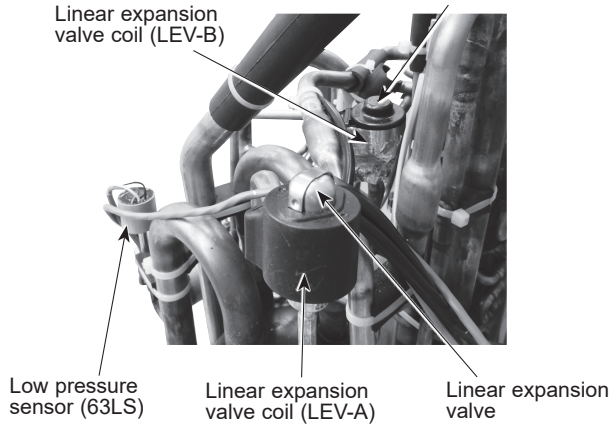

Notes:
1. **Recover refrigerant without spreading it in the air.**
2. **The welded part can be removed easily by removing the right side panel.**
3. **When installing the following parts, cover it with a wet cloth to prevent it from heating as the temperature below, then braze the pipes so that the inside of pipes are not oxidized;**
   - **Bypass valve (procedure 9), 248°F [120°C] or more**
   - **High pressure switch and high pressure sensor (procedure 10), 212°F [100°C] or more**
   - **Low pressure sensor (procedure 11), 100°C or more**
   - **LEV (procedure 12), 248°F [120°C] or more**

OPERATING PROCEDURE	PHOTOS/FIGURES
13. Removing the compressor (MC) (1) Remove the service panel. (See Photo 1) (2) Remove the top panel. (See Photo 1) (3) Remove the cover panel (front). (Refer to procedure 8(5)) (4) Remove the cover panel (rear) (Refer to procedure 8(6)) (5) Remove the side panel (R). (Refer to procedure 8 (7)) (6) Remove 2 front cover panel fixing screws (5 × 12) and remove the front cover panel. (See Photo 4) (7) Remove the electrical parts box. (See Photo 5) (8) Remove the valve bed. (Refer to procedure 8 (4)) (9) Remove 3 separator fixing screws (4 × 10) and remove the separator. (See Figure 2) (10) Remove the comp felt covering the compressor, and remove the thermistor <Compressor> (TH4), thermal protector (TRS), and the lead wires. (See Photo 7 and 14) (11) Recover refrigerant. (12) Remove the 3 compressor fixing nuts for motor using spanner or adjustable wrench. (13) Remove the welded pipe of compressor inlet and outlet and then remove the compressor. **Note: Recover refrigerant without spreading it in the air.**	**Photo 13** 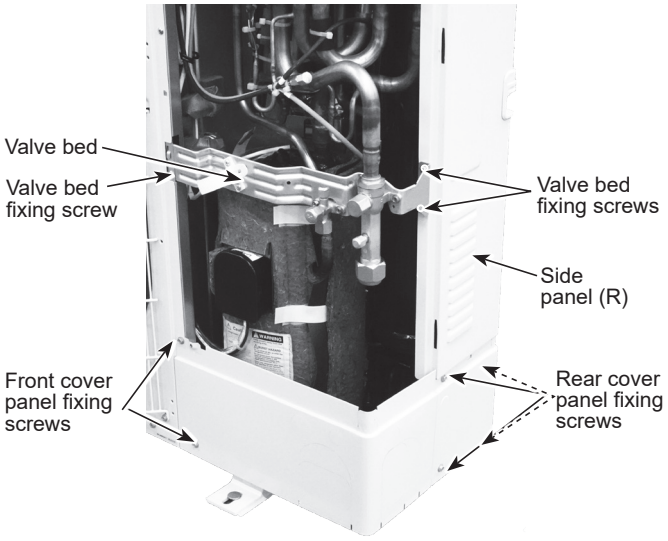
Figure 2 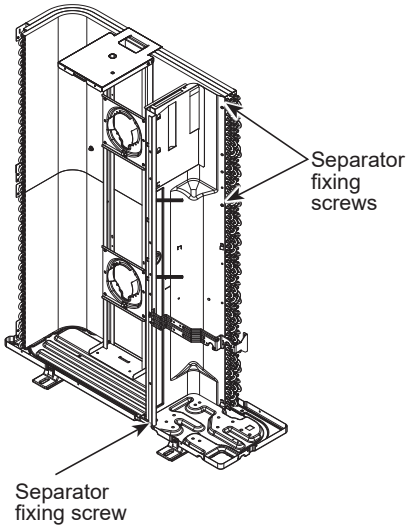 	**Photo 14** 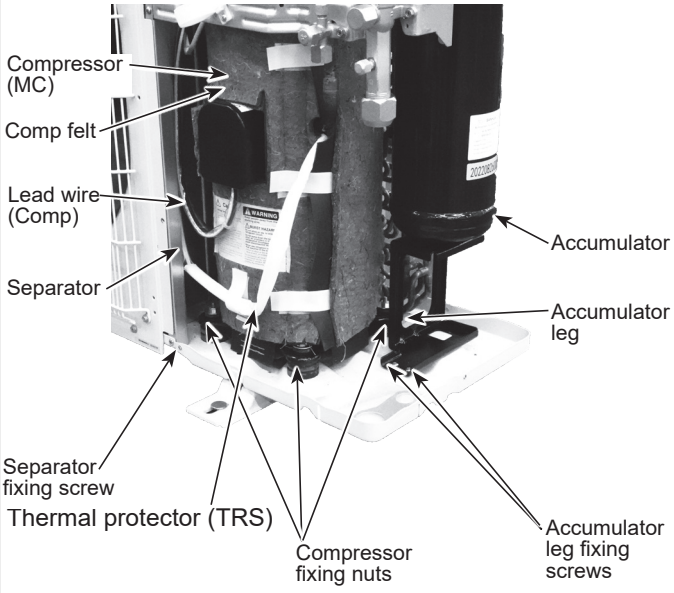

OPERATING PROCEDURE	PHOTOS/FIGURES
14. Removing the accumulator (1) Remove the service panel. (See Photo 1) (2) Remove the top panel. (See Photo 1) (3) Remove the electrical parts box. (See Photo 5) (4) Remove the valve bed. (See procedure 8 (4)) (5) Remove the cover panel (front). (Refer to procedure 8(5)) (6) Remove the cover panel (rear) (Refer to procedure 8(6)) (7) Remove the side panel (R). (Refer to procedure 8 (7)) (8) Recover refrigerant. (9) Remove 2 welded pipes of accumulator inlet and outlet. (10) Remove 2 accumulator leg fixing screws (4 × 10). (See Photo 16) **Note: Recover refrigerant without spreading it in the air.**	**Photo 15** 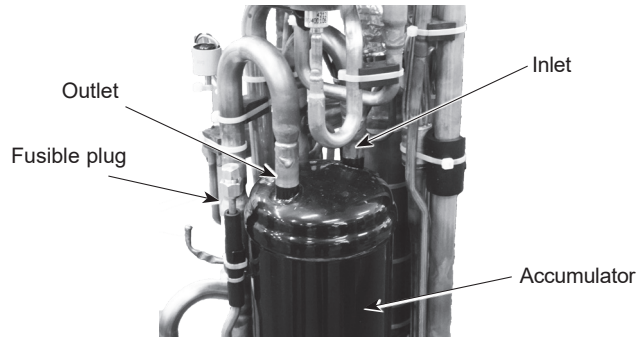
	Photo 16 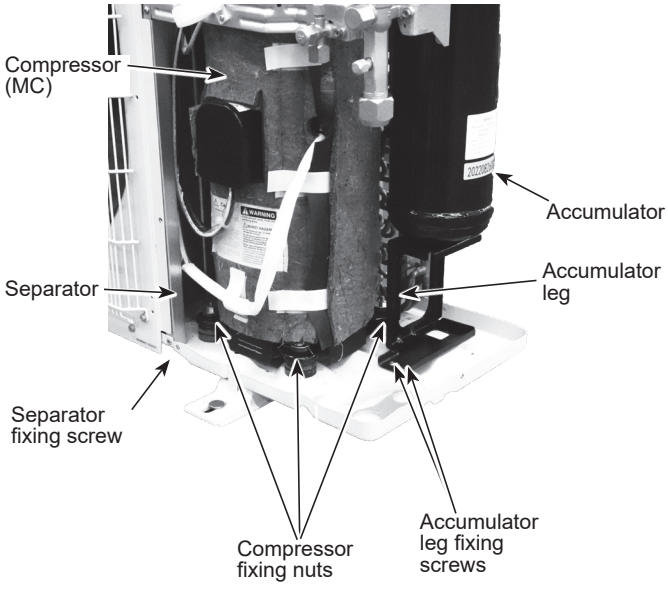
15. Removing the reactor (DCL) (1) Remove the service panel. (See Photo 1) (2) Remove the top panel. (See Photo 1) (3) Remove the electrical parts box (See photo 5) (4) Remove 6 screws (4 x 10) for reactors to remove the reactors. (See Figure 3)	**Figure 3** 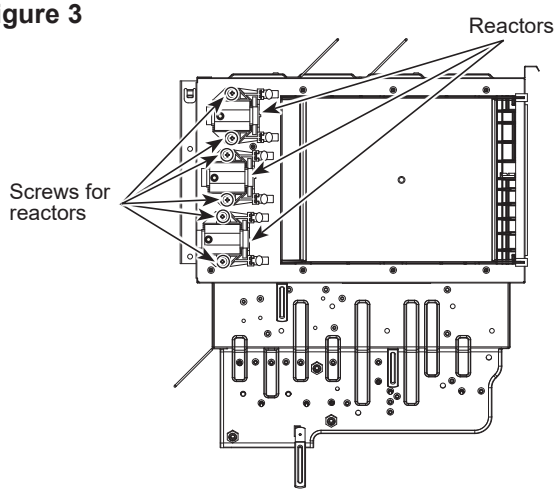

OPERATING PROCEDURE	PHOTOS/FIGURES
16. Changing the fusible plug See the following descriptions. • Be careful not to expose the fusible plug to the braze torch flame or transfer heat to it. (See Photo 17) • The temperature of the fusible plug must not become 140°F (60°C) or more while working. Protect the fusible plug with a wet cloth when necessary. (The fusible plug breaks at 158°F [70°C]). • Tighten the screw in 14 - 18 N·m* (11-13 lbf·ft) with 2 wrenches. *1 N·m ≈ 10 kgf·cm	**Photo 17** 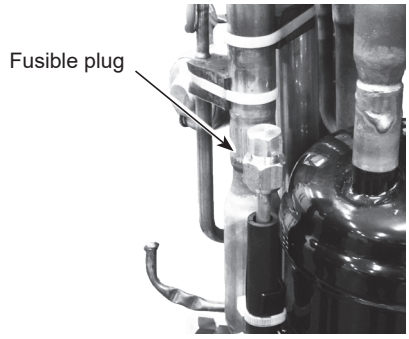
17. Removing the thermal protector (TRS)) (1) Remove the service panel. (See Photo 1) (2) Remove the cover panel front. (See Photo 1) (3) Pull out the lead wire of high pressure switch and discon nect the connector, 63H (yellow) from the multi controller board in the electrical parts box. (See Photo 11) (4) Remove the comp felt covering the compressor. (See Photo 14) (5) Loosen the clamp or band for the lead wire of the electrical parts box and separator. (6) Pull out the thermal protector (TRS) from the holder. (See Photo 18)	**Photo 18** 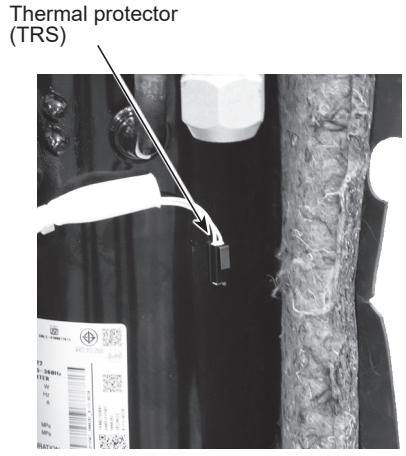
18. Removing the fuse holders (1) Remove the service panel. (See Photo 1) (2) Remove 2 screws (4 x 10) for cont base to remove the cont base. (See Figure 4) (3) Remove the fuse covers. (See Figure 5) (4) Remove screws (3 x 12) for fuse holders to remove the fuse holders. (See Figure 4 and Photo 19) Notes: 1. Bracket, circuit board and other parts can get deformed when inserting and removing the fuse cover. 2. Remove the fuse cover in the way that surrounding parts will not be affected.	**Photo 19** 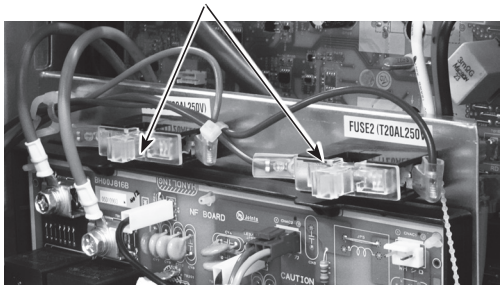 **Figure 4** 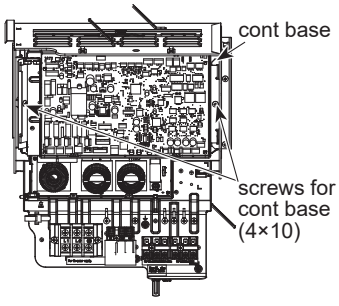 **Figure 5** 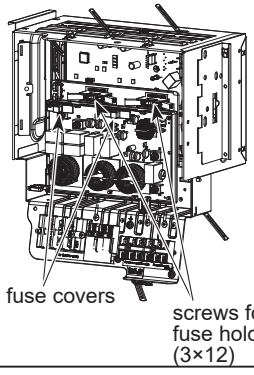

MXZ-SM36NAMHZ2-U1 MXZ-SM42NAMHZ2-U1 MXZ-SM48NAMHZ2-U1

→ : Indicates the visible parts in the photos/figures.

OPERATING PROCEDURE	PHOTOS/FIGURES
1. Removing the service panel and top panel (1) Remove 3 service panel fixing screws (5 × 12), then slide the hook on the right downward to remove the service panel. (2) Remove screws (2 for front, 3 for rear/5 × 12) of the top panel and remove it.	**Photo 1** 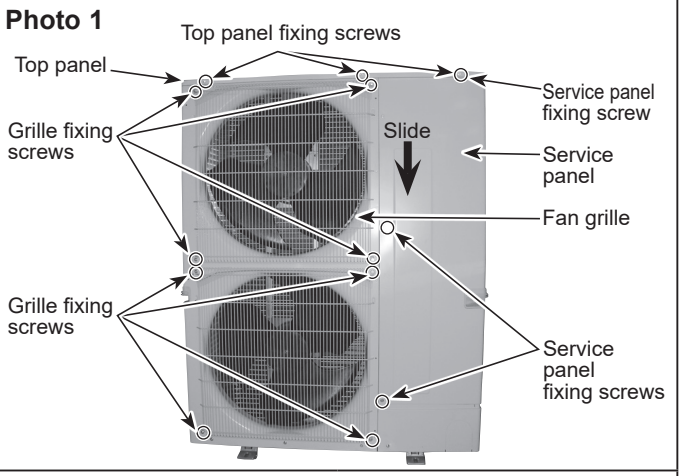
2. Removing the fan motor (MF1, MF2) (1) Remove the service panel. (See Photo 1) (2) Remove the top panel. (See Photo 1) (3) Remove 4 fan grille fixing screws (5 × 12) to detach the fan grille. (See Photo 1) (4) Remove a nut (for right handed screw of M6) to detach the propeller. (See Photo 2) (5) Disconnect the connectors, CNF1 and CNF2 on the multi controller circuit board in the electrical parts box. (6) Remove 4 fan motor fixing screws (5 × 20) to detach the fan motor. (See Photo 3) **Note: Tighten the propeller fan with a torque of 5.7 ± 0.3 N·m. [4.2 ± 0.2 ft = lbs]**	**Photo 2** 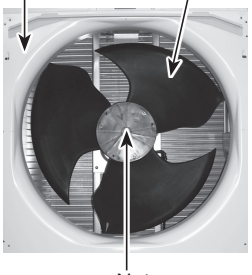 **Photo 3** 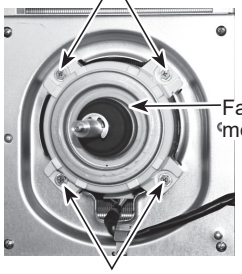
3. Removing the electrical parts box (1) Remove the service panel. (See Photo 1) (2) Remove the top panel. (See Photo 1) (3) Disconnect the connecting wire from terminal block. (4) Remove all of the following connectors from multi controller circuit board; <Diagram symbol in the connector housing> • Fan motor (CNF1, CNF2) • Thermistor <HIC pipe> (TH2) • Thermistor <Outdoor liquid pipe> (TH3) • Thermistor <Compressor> (TH4) • Thermistor <Suction pipe/Ambient, Outdoor> (TH7/6) • High pressure switch (63H) • High pressure sensor (63HS) • Low pressure sensor (63LS) • 4-way valve (21S4) • Bypass valve (SV1, SV2) • Linear expansion valve (LEV-A, LEV-B) • Base heater (SS) Pull out the disconnected wire from the electrical parts box. (5) Remove the terminal cover and disconnect the compressor lead wire from the comp. terminal. (See Figure 1) **Note: The terminal cover can be easily removed by using a blade of flathead screwdriver.** **Figure 1** 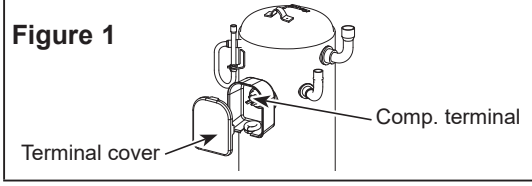 	**Photo 4** 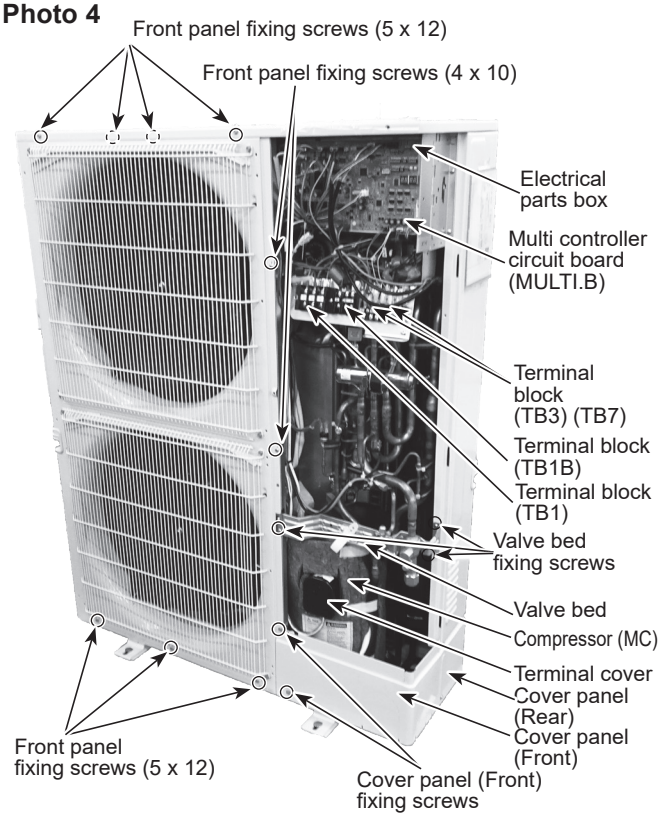

Continue to the next page.

From the previous page.

OPERATING PROCEDURE	PHOTOS/FIGURES
(6) Remove 2 electrical parts box fixing screws (4 × 10), then detach the electrical parts box by pulling it upward. The electrical parts box is fixed with 2 hooks on the left and 1 hook on the right.	**Photo 5** 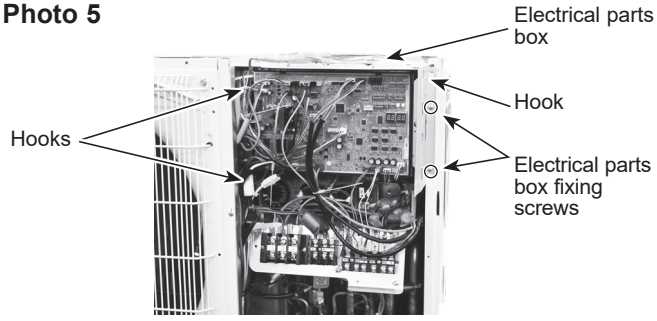
4. Removing the thermistor <Suction pipe> (TH6) (1) Remove the service panel. (See Photo 1) (2) Remove the top panel. (See Photo 1) (3) Disconnect the connector, TH7/6 (red), on the multi controller circuit board in the electrical parts box. (4) Loosen the wire clamps on the top of the electrical parts box. (See Photo 6) (5) Pull out the thermistor <Suction pipe> (TH6) from the sensor holder. (See Photo 7) **Note: When replacing thermistor <Suction pipe> (TH6), replace it together with thermistor <Ambient> (TH7) since they are combined together.** **Refer to procedure No.5 below to remove thermistor <Ambient> (TH7).**	**Photo 6** 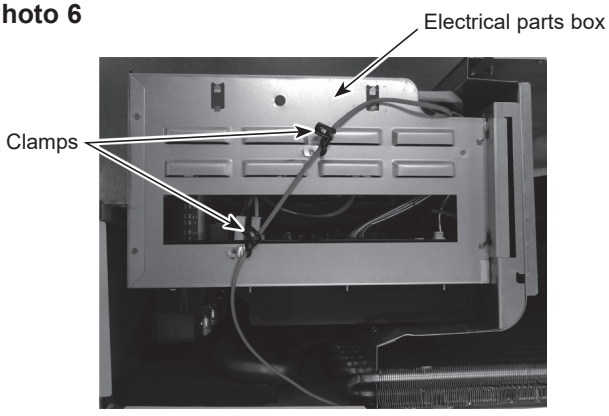 **Photo 7** 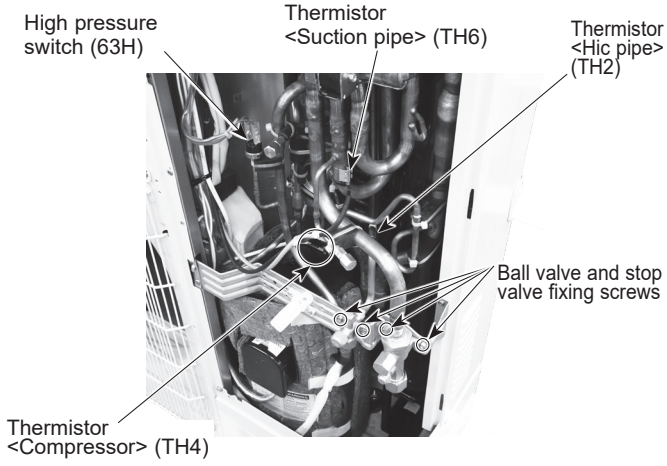
5. Removing the thermistor <Ambient> (TH7) (1) Remove the service panel. (See Photo 1) (2) Remove the top panel. (See Photo 1) (3) Disconnect the connector TH7/6 (red) on the multi controller circuit board in the electrical parts box. (4) Loosen the wire clamps on top of the electrical parts box. (See Photo 6) (5) Pull out the thermistor <Ambient> (TH7) from the sensor holder. **Note: When replacing thermistor <Ambient> (TH7), replace it together with thermistor <Suction pipe> (TH6), since they are combined together.** **Refer to procedure No.4 above to remove thermistor <Suction pipe> (TH6).**	**Photo 8** 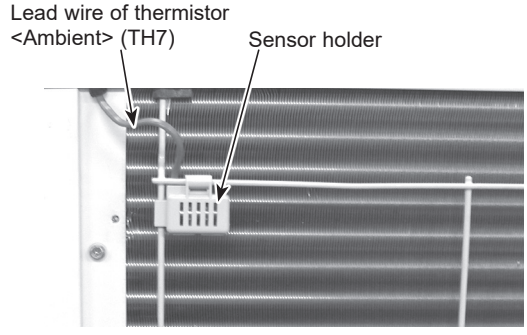

OPERATING PROCEDURE	PHOTOS/FIGURES
6. Removing the thermistor <Outdoor liquid pipe> (TH3) and thermistor <Compressor> (TH4), thermistor <HIC pipe> (TH2) (1) Remove the service panel. (See Photo 1) (2) Disconnect the connectors, TH3 (white) and TH4 (white), TH2 (black) on the multi controller circuit board in the electrical parts box. (3) Pull out the thermistor <Outdoor liquid pipe> (TH3) and thermistor <Compressor> (TH4) from the sensor holder. (See Photo 7 and 9)	**Photo 9** Thermistor <Outdoor liquid pipe> (TH3)
7. Removing the 4-way valve coil (21S4) (1) Remove the service panel. (See Photo 1) (2) Remove 4-way valve coil fixing screw (M5 × 7). (3) Remove the 4-way valve coil by sliding the coil to the right. (4) Disconnect the connector 21S4 (green) on the multi controller circuit board in the electrical parts box.	**Photo 10** 4-way valve coil (21S4) 4-way valve 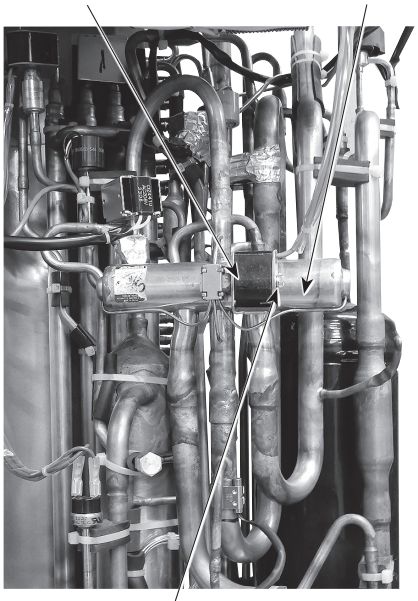 4-way valve coil fixing screw
8. Removing the 4-way valve (1) Remove the service panel. (See Photo 1) (2) Remove the top panel. (See Photo 1) (3) Remove the electrical parts box (See Photo 5) (4) Remove 3 valve bed fixing screws (4 × 10) and 4 ball valve and stop valve fixing screws (5 × 16), then remove the valve bed. (See Photo 4 and 7) (5) Remove 2 cover panel fixing screws (5 x 12), then slide the cover panel (front) upward to remove it. (The cover panel (front) is fixed to the cover panel (rear) with a hook on the rear side. (See Photo 4) (6) Remove the cover panel (rear) fixing screws (2 for right side and 2 for rear/ 5 x 12), then slide the cover panel (rear) upward to remove it. (The cover panel (rear) is fixed to the side panel (R) with 2 screws.) (7) Remove 3 side panel (R) fixing screws (5 × 12) in the rear of the unit, then slide the side panel (R) upward to remove it. (The side panel (R) is fixed to the side plate with hooks on the rear side.) (8) Remove the 4-way valve coil. (See Photo 10) (9) Recover refrigerant. (10) Remove the welded part of 4-way valve. **Notes:** **1. Recover refrigerant without spreading it in the air.** **2. The welded part can be removed easily by removing the side panel (R).** **3. When installing the 4-way valve, cover it with a wet cloth to prevent it from heating (248°F [120°C] or more), then braze the pipes so that the inside of pipes are not oxidized.**	

OPERATING PROCEDURE	PHOTOS/FIGURES

9. Removing bypass valve coil (SV1, SV2) and bypass valve

(1) Remove the service panel. (See Photo 1)
(2) Remove the top panel. (See Photo 1)
(3) Remove the cover panel (front). (Refer to procedure 8(5))
(4) Remove the cover panel (rear) (Refer to procedure 8(6))
(5) Remove the side panel (R). (Refer to procedure 8 (7))
(6) Remove the bypass valve coil fixing screw (M4 × 6).
(7) Remove the bypass valve coil by sliding the coil upward.
(8) Disconnect the connector SV1 (gray) or SV2 (blue) on the multi controller circuit board in the electrical parts box.
(9) Remove the electrical parts box. (See Photo 5)
(10) Recover refrigerant.
(11) Remove the welded part of bypass valve.
Refer to the notes below.

10. Removing the high pressure switch (63H) and high pressure sensor (63HS)

(1) Remove the service panel. (See Photo 1)
(2) Remove the top panel. (See Photo 1)
(3) Remove the cover panel (front). (Refer to procedure 8(5))
(4) Remove the cover panel (rear) (Refer to procedure 8(6))
(5) Remove the side panel (R). (Refer to procedure 8 (7))
(6) Pull out the lead wire of high pressure switch and high pressure sensor.
(7) Remove the electrical parts box. (See Photo 5)
(8) Recover refrigerant.
(9) Remove the welded part of high pressure switch and high pressure sensor.
Refer to the notes below.

Photo 11

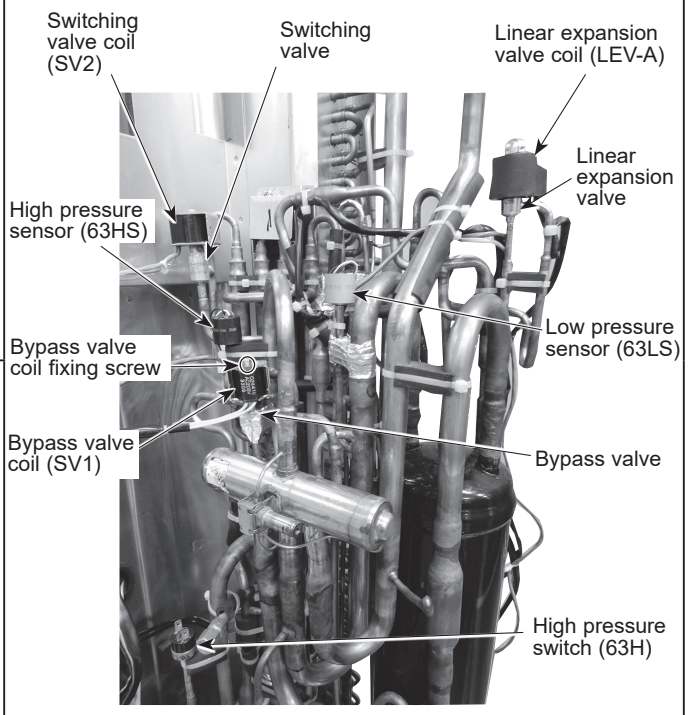

11. Removing the low pressure sensor (63LS)

(1) Remove the service panel. (See Photo 1)
(2) Remove the top panel. (See Photo 1)
(3) Remove the cover panel (front). (Refer to procedure 8(5))
(4) Remove the cover panel (rear) (Refer to procedure 8(6))
(5) Remove the side panel (R). (Refer to procedure 8 (7))
(6) Disconnect the connector 63LS (blue) on the multi controller circuit board in the electrical parts box.
(7) Remove the electrical parts box. (See Photo 5)
(8) Recover refrigerant.
(9) Remove the welded part of low pressure sensor.
Refer to the notes below.

12. Removing linear expansion valve (LEV-A, LEV-B)

(1) Remove the service panel. (See Photo 1)
(2) Remove the top panel. (See Photo 1)
(3) Remove the cover panel (front). (Refer to procedure 8(5))
(4) Remove the cover panel (rear) (Refer to procedure 8(6))
(5) Remove the side panel (R). (Refer to procedure 8 (7))
(6) Remove the linear expansion valve coil. (See Photo 11,12)
(7) Remove the electrical parts box. (See Photo 5)
(8) Recover refrigerant.
(9) Remove the welded part of linear expansion valve.
Refer to the notes on the right.

Photo 12

Notes:
1. Recover refrigerant without spreading it in the air.
2. The welded part can be removed easily by removing the side panel (R).
3. When installing the following parts, cover it with a wet cloth to prevent it from heating as the temperature below, then braze the pipes so that the inside of pipes are not oxidized;
- **Bypass valve (procedure 9), 248°F [120°C] or more**
- **High pressure switch and high pressure sensor (procedure 10), 212°F [100°C] or more**
- **Low pressure sensor (procedure 11), 212°F [100°C] or more**
- **LEV (procedure 12), 248°F [120°C] or more**

OPERATING PROCEDURE	PHOTOS/FIGURES
13. Removing the compressor (MC) (1) Remove the service panel. (See Photo 1) (2) Remove the top panel. (See Photo 1) (3) Remove the cover panel (front). (Refer to procedure 8(5)) (4) Remove the cover panel (rear) (Refer to procedure 8(6)) (5) Remove the side panel (R). (Refer to procedure 8 (7)) (6) Remove 2 front cover panel fixing screws (5 × 12) and remove the cover panel (front). (See Photo 4) (7) Remove the electrical parts box. (See Photo 5) (8) Remove the valve bed. (Refer to procedure 8 (4)) (9) Remove 3 separator fixing screws (4 × 10) and remove the separator. (See Figure 2) (10) Remove the comp felt covering the compressor, and remove the thermistor <Compressor> (TH4), thermal protector (TRS), and the lead wires. (See Photo 7 and 13) (11) Recover refrigerant. (12) Remove the 3 compressor fixing nuts for motor using spanner or adjustable wrench. (13) Remove the welded pipe of compressor inlet and outlet and then remove the compressor. **Note: Recover refrigerant without spreading it in the air.**	**Photo 13** 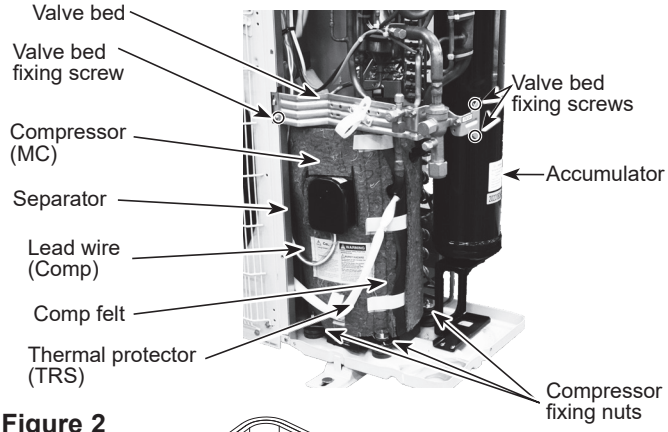 **Figure 2** 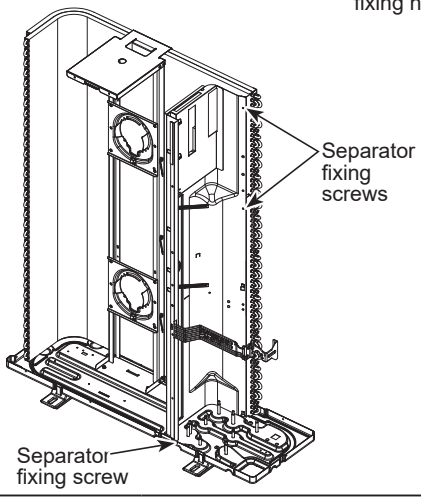
14. Removing the accumulator (1) Remove the service panel. (See Photo 1) (2) Remove the top panel. (See Photo 1) (3) Remove the cover panel (front). (Refer to procedure 13 (3)) (4) Remove the cover panel (rear). (Refer to procedure 13 (5)) (5) Remove the side panel (R). (Refer to procedure 8 (7)) (6) Remove the electrical parts box. (See Photo 5) (7) Remove the valve bed. (See procedure 8 (4)) (8) Recover refrigerant. (9) Remove 4 welded pipes of accumulator inlet and outlet. (10) Remove 2 accumulator leg fixing screws (4 × 10). (See Photo 15) **Note: Recover refrigerant without spreading it in the air.**	**Photo 14** 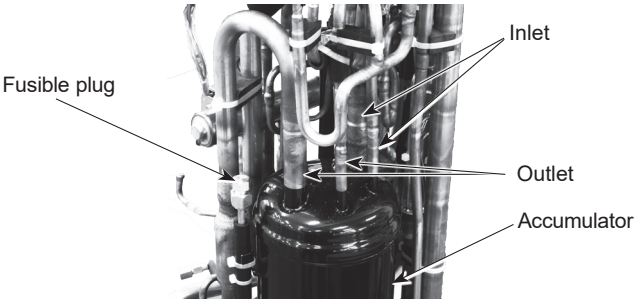 **Photo 15** 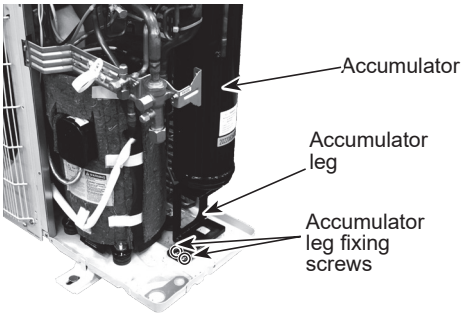

OPERATING PROCEDURE	PHOTOS/FIGURES
15. Removing the reactor (DCL) (1) Remove the service panel. (See Photo 1) (2) Remove the top panel. (See Photo 1) (3) Remove the electrical parts box (See Photo 5) (4) Remove 6 screws (4 x 10) for reactor to remove the reactors. (See Figure 3)	**Figure 3** 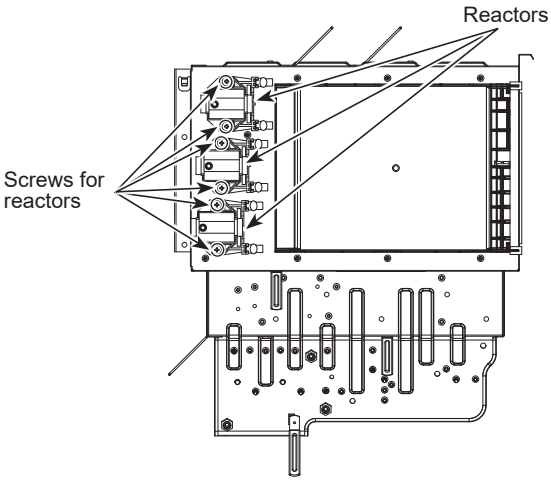
16. Removing the base heater (1) Remove the service panel. (See Photo 1) (2) Remove the top panel. (See Photo 1) (3) Remove 4 fan grille fixing screws (5 × 12) to detach the fan grille. (See Photo 1) (4) Remove a nut (for right handed screw of M6) to detach the propeller. (See Photo 2) (5) Remove all of the following connectors from multi controller circuit board; <Diagram symbol in the connector housing> • Fan motor (CNF1, CNF2) • Base heater (SS) Pull out the disconnected wire from the electrical parts box. (See Photo 4) (6) Loosen the wire clamps on the side of the motor support and separator. (7) Remove 2 motor support fixing screws (5 x 12), then remove the motor support with fan motor still attached. (See Photo 16) (8) Remove 4 base heater cover fixing screws (4 x 10), then remove the base heater cover. (9) Remove the base heater. (See Photo 17) **Notes:** **1. Tighten the propeller fan with a torque of 5.7 ± 0.3 N·m [4.2 ± 0.2 ft = lbs]** **2. Rotate the propeller fan and make sure that the base heater and the lead wires do not interfere with the movement of the propeller fan.**	**Photo 16** 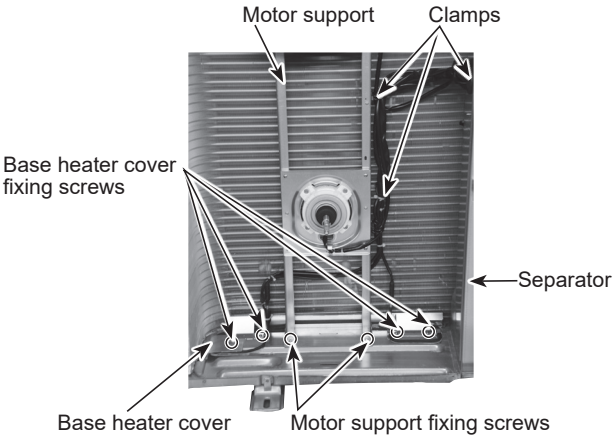 **Photo 17** 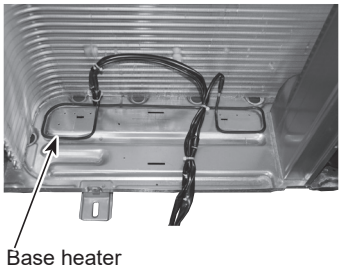

OPERATION PROCEDURE	PHOTOS/FIGURES
17. Changing the fusible plug See the following descriptions. • Be careful not to expose the fusible plug to the braze torch flame or transfer heat to it. (See Photo 18) • The temperature of the fusible plug must not become 140°F (60°C) or more while working. Protect the fusible plug with a wet cloth when necessary. (The fusible plug breaks at 158°F [70°C]). • Tighten the screw in 14 - 18 N·m* (11-13 lbf·ft) with 2 wrenches. *1 N·m ≈ 10 kgf·cm	**Photo 18** 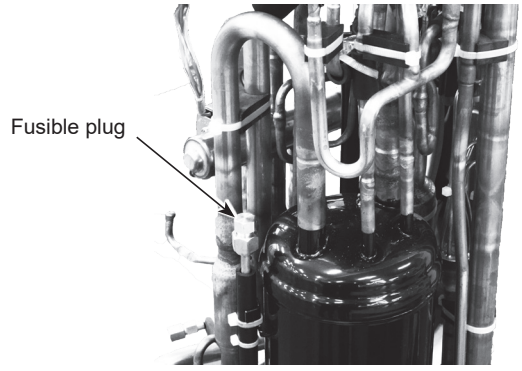
18. Removing the thermal protector (TRS)) (1) Remove the service panel. (See Photo 1) (2) Remove the cover panel front. (See Photo 1) (3) Pull out the lead wire of high pressure switch and discon nect the connector, 63H (yellow) from the multi controller board in the electrical parts box. (See Photo 11) (4) Remove the comp felt covering the compressor. (See Photo 13) (5) Loosen the clamp or band for the lead wire of the electrical parts box and separator. (6) Pull out the thermal protector (TRS) from the holder. (See Photo 19)	**Photo 19**
19. Removing the fuse holders (1) Remove the service panel. (See Photo 1) (2) Remove 2 screws (4 x 10) for cont base to remove the cont base. (See Figure 4) (3) Remove the fuse covers. (See Figure 5) (4) Remove screws (3 x 12) for fuse holders to remove the fuse holders. (See Figure 5 and Photo 20) Notes: 1. Bracket, circuit board and other parts can get deformed when inserting and removing the fuse cover. 2. Remove the fuse cover in the way that surrounding parts will not be affected.	**Photo 20** 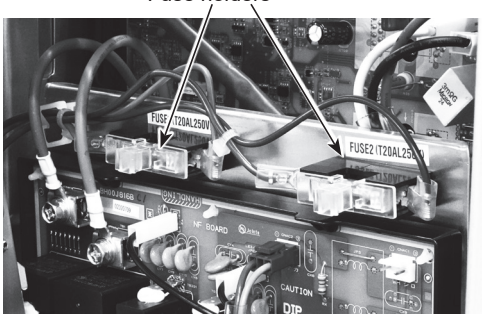 **Figure 4** 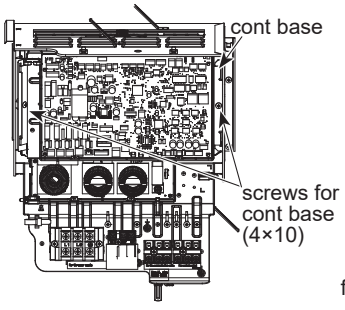 **Figure 5** 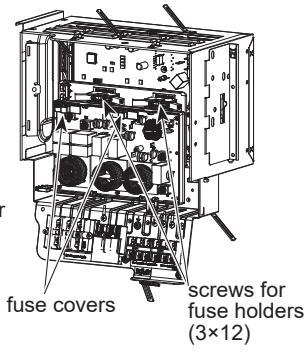

12 REMOTE CONTROLLER

12-1. REMOTE CONTROLLER FUNCTIONS

<PAR-41MAA>

Controller interface

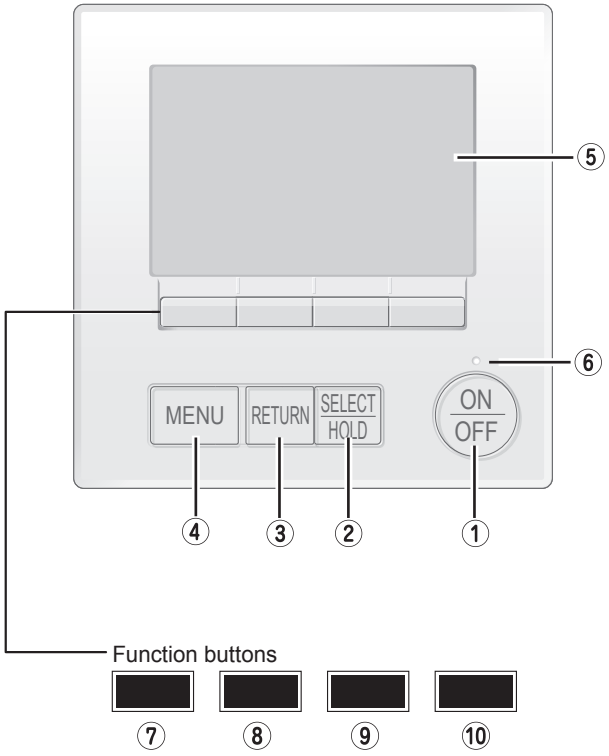

The functions of the function buttons change depending on the screen.
Refer to the button function guide that appears at the bottom of the LCD for the functions they serve on a given screen.
When the system is centrally controlled, the button function guide that corresponds to the locked button will not appear.

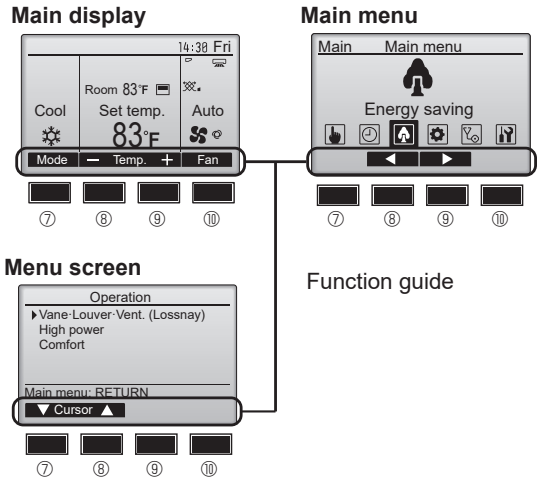

① [ON/OFF] button

Press to turn ON/OFF the indoor unit.

② [SELECT/HOLD] button

Press to save the setting.
When the Main menu is displayed, pressing this button will enable/disable the HOLD function.

③ [RETURN] button

Press to return to the previous screen.

④ [MENU] button

Press to bring up the Main menu.

⑤ Backlit LCD

Operation settings will appear.
When the backlight is off, pressing any button turns the backlight on and it will stay lit for a certain period of time depending on the screen.

When the backlight is off, pressing any button turns the backlight on and does not perform its function. (except for the [ON/OFF] button)

⑥ ON/OFF lamp

This lamp lights up in green while the unit is in operation. It blinks while the remote controller is starting up or when there is an error.

⑦ Function button [F1]

Main display: Press to change the operation mode.
Menu screen: The button function varies with the screen.

⑧ Function button [F2]

Main display: Press to decrease temperature.
Main menu: Press to move the cursor left.
Menu screen: The button function varies with the screen.

⑨ Function button [F3]

Main display: Press to increase temperature.
Main menu: Press to move the cursor right.
Menu screen: The button function varies with the screen.

⑩ Function button [F4]

Main display: Press to change the fan speed.
Menu screen: The button function varies with the screen.

Display

The main display can be displayed in two different modes: “Full” and “Basic”. The initial setting is “Full”. To switch to the “Basic” mode, change the setting on the Main display setting. (Refer to operation manual included with remote controller.)

<Full mode>

All icons are displayed for explanation.

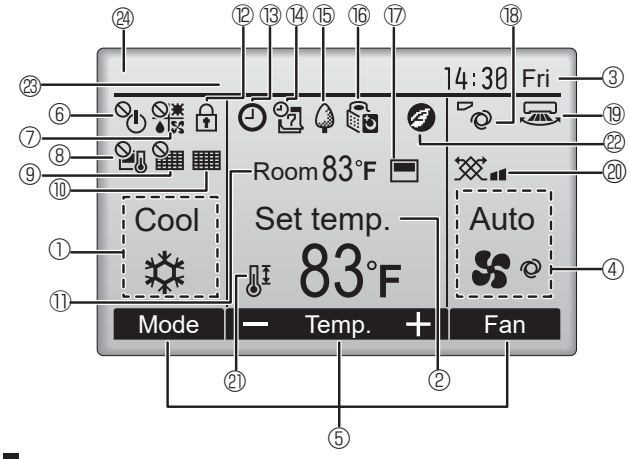

<Basic mode>

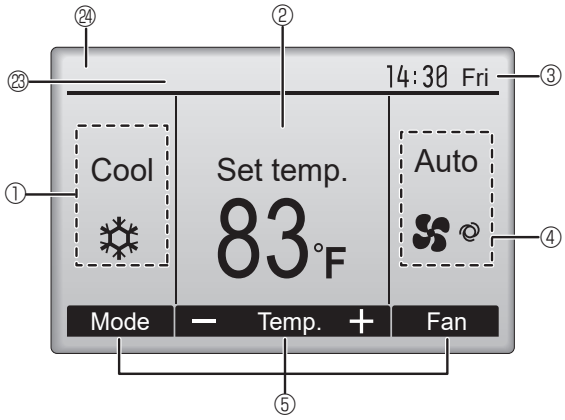

① Operation mode

② Preset temperature

③ Clock

④ Fan speed

⑤ Button function guide

Functions of the corresponding buttons appear here.

⑥

Appears when the ON/OFF operation is centrally controlled.

⑦

Appears when the operation mode is centrally controlled.

⑧

Appears when the preset temperature is centrally controlled.

⑨

Appears when the filter reset function is centrally controlled.

⑩

Indicates when filter needs maintenance.

⑪ Room temperature

⑫

Appears when the buttons are locked.

⑬

Appears when the On/Off timer or Auto-off timer function is enabled.

appears when the timer is disabled by the centralized control system.

appears when the HOLD function is enable.

⑭

Appears when the Weekly timer is enabled.

⑮

Appears while the units are operated in the energy saving mode. (Will not appear on some models of indoor units)

⑯

Appears while the outdoor units are operated in the silent mode.

⑰

Appears when the built-in thermistor on the remote controller is activated to monitor the room temperature (⑪).

appears when the thermistor on the indoor unit is activated to monitor the room temperature.

⑱

Indicates the vane setting.

⑲ *1

Indicates the louver setting.

⑳

Indicates the ventilation setting.

㉑

Appears when the preset temperature range is restricted.

㉒ *1

Appears when an energy saving operation is performed using a “3D i-See sensor” function.

㉓ Centrally controlled

Appears for a certain period of time when a centrally-controlled item is operated.

㉔ Preliminary error display

A check code appears during the preliminary error.

Most settings (except ON/OFF, mode, fan speed, temperature) can be made from the Main menu.

*1 These functions are not applied to the floor standing models.

Menu structure

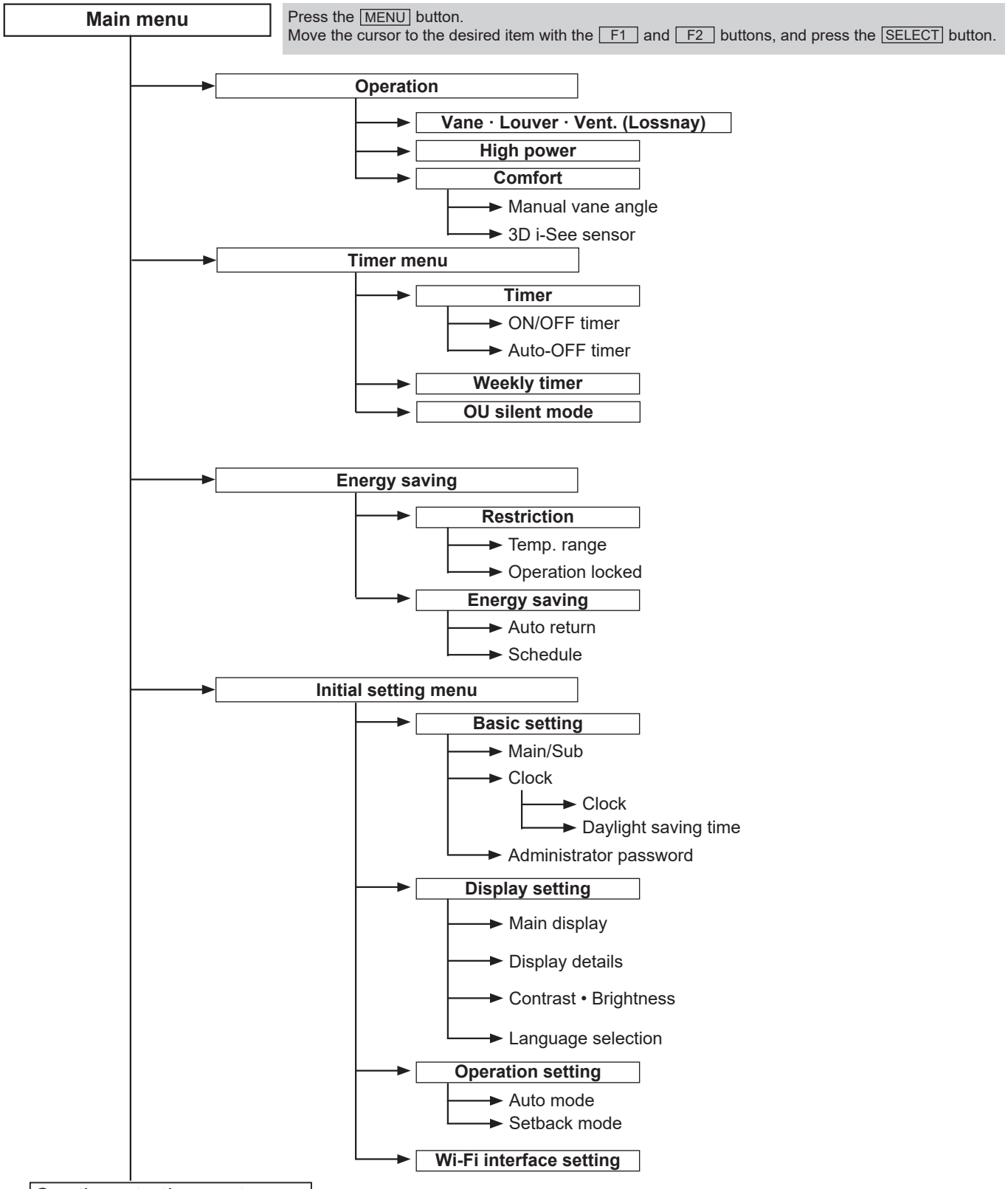

Continue to the next page.

Not all functions are available on all models of indoor units.

Continue from the previous page.

- **Maintenance menu**
  - **Error information**
  - **Filter information**
  - **Cleaning**
    - Auto descending panel
      - Descending operation
      - Descending adjustment
- **Service menu**
  - **Test run menu**
    - Test run
    - Drain pump test run
  - **Maintenance information**
    - Model name input
    - Serial No. input
    - Dealer information input
    - Initialize maintenance info.
  - **Settings menu**
    - Function setting
  - **Check menu**
    - Error history menu
      - Error history
    - Diagnosis
      - Self check
      - Remote controller check
    - Smooth maintenance
    - Request code
  - **Other menu**
    - Maintenance password
    - Initialize remote controller
    - Remote controller information

Not all functions are available on all models of indoor units.

Main menu list

Main menu	Setting and display items		Setting details
Operation	Vane · Louver · Vent. (Lossnay)		**Use to set the vane angle.** • Select a desired vane setting. **Use to turn ON/OFF the louver.** • Select a desired setting from "ON" and "OFF." **Use to set the amount of ventilation.** • Select a desired setting from "Off," "Low," and "High."
	High power *3		**Use to reach the comfortable room temperature quickly.** • Units can be operated in the High-power mode for up to 30 minutes.
	Comfort	Manual vane angle	**Use to fix each vane angle.**
		3D i-See sensor	**Use to set the following functions for 3D i-See sensor.** • Air distribution • Energy saving option • Seasonal airflow
Timer	Timer	ON/OFF timer *1	**Use to set the operation ON/OFF times.** • Time can be set in 5-minute increments.
		Auto-Off timer	**Use to set the Auto-Off time.** • Time can be set to a value from 30 to 240 in 10-minute increments.
	Weekly timer *1, *2		**Use to set the weekly operation ON/OFF times.** • Up to 8 operation patterns can be set for each day. (Not valid when the ON/OFF timer is enabled.)
	OU silent mode *1, *3		**Use to set the time periods in which priority is given to quiet operation of outdoor units over temperature control. Set the Start/Stop times for each day of the week.** •Select the desired silent level from "Normal," "Middle," and "Quiet."
Energy saving	Restriction	Temp. range *2	**Use to restrict the preset temperature range.** • Different temperature ranges can be set for different operation modes.
		Operation locked	**Use to lock selected functions.** • The locked functions cannot be operated.
	Energy saving	Auto return *2	**Use to get the units to operate at the preset temperature after performing energy saving operation for a specified time period.** • Time can be set to a value from 30 and 120 in 10-minute increments. (This function will not be valid when the preset temperature ranges are restricted.)
		Schedule *1, *3	**Set the start/stop times to operate the units in the energy saving mode for each day of the week, and set the energy saving rate.** • Up to 4 energy saving operation patterns can be set for each day. • Time can be set in 5-minute increments. • Energy saving rate can be set to a value from 0% or 50 to 90% in 10% increments.
Initial setting	Basic setting	Main/Sub	**When connecting 2 remote controllers, one of them needs to be designated as a sub controller.**
		Clock	**Use to set the current time.**
		Daylight saving time	**Set the daylight saving time.**
		Administrator password	**The administrator password is required to make the settings for the following items.** • Timer setting • Energy saving setting • Weekly timer setting • Restriction setting • Outdoor unit silent mode setting

*1 Clock setting is required.
*2 2°F (1°C) increments.
*3 This function is available only when certain outdoor units are connected.

Main menu	Setting and display items		Setting details
Initial setting	Display setting	Main display	**Use to switch between "Full" and "Basic" modes for the Main display, and use to change the background colors of the display to black.**
		Display details	**Make the settings for the remote controller related items as necessary.** **Clock:** The initial settings are "Yes" and "24h" format. **Temperature:** Set either Celsius (°C) or Fahrenheit (°F). **Room temp.:** Set Show or Hide. **Auto mode:** Set Auto mode display or Only Auto display.
		Contrast • Brightness	**Use to adjust screen contrast and brightness.**
		Language selection	**Use to select the desired language.**
	Operation setting	Auto mode	**Whether or not to use Auto mode can be selected by using the button. This setting is valid only when indoor units with Auto mode function are connected.**
		Setback mode	**Whether or not to use the Setback mode can be selected by using the button. This setting is valid only when indoor units with the Setback mode function are connected.**
Maintenance	Error information		**Use to check error information when an error occurs.** • Check code, error source, refrigerant address, model name, manufacturing number, contact information (dealer's phone number) can be displayed. (The model name, manufacturing number, and contact information need to be registered in advance to be displayed.)
	Filter information		**Use to check the filter status.** • The filter sign can be reset.
	Cleaning	Auto descending panel	**Use to lift and lower the auto descending panel (Optional parts).**
Service	Test run		**Select "Test run" from the Service menu to bring up the Test run menu.** • Test run • Drain pump test run
	Input maintenance		**Select "Input maintenance Info." from the Service menu to bring up the Maintenance information screen.** **The following settings can be made from the Maintenance Information screen.** • Model name input • Serial No. input • Dealer information input • Initialize maintenance info.
	Settings	Function setting	**Make the settings for the indoor unit functions via the remote controller as necessary.**
	Check	Error history	Display the error history and execute "delete error history".
		Diagnosis	**Self check:** Error history of each unit can be checked via the remote controller. **Remote controller check:** When the remote controller does not work properly, use the remote controller checking function to troubleshoot the problem.
		Smooth maintenance *1	**Use to display the maintenance data of indoor/outdoor units.**
		Request code *1	**Use to check operation data such as thermistor temperature and error information.**
	Others	Maintenance password	**Use to change the maintenance password.**
		Initialize remote controller	**Use to initialize the remote controller to the factory shipment status.**
		Remote controller information	**Use to display the remote controller model name, software version, and serial number.**

*1 This function is available only when certain outdoor units are connected.

<PAR-FL32MA>

Controller interface

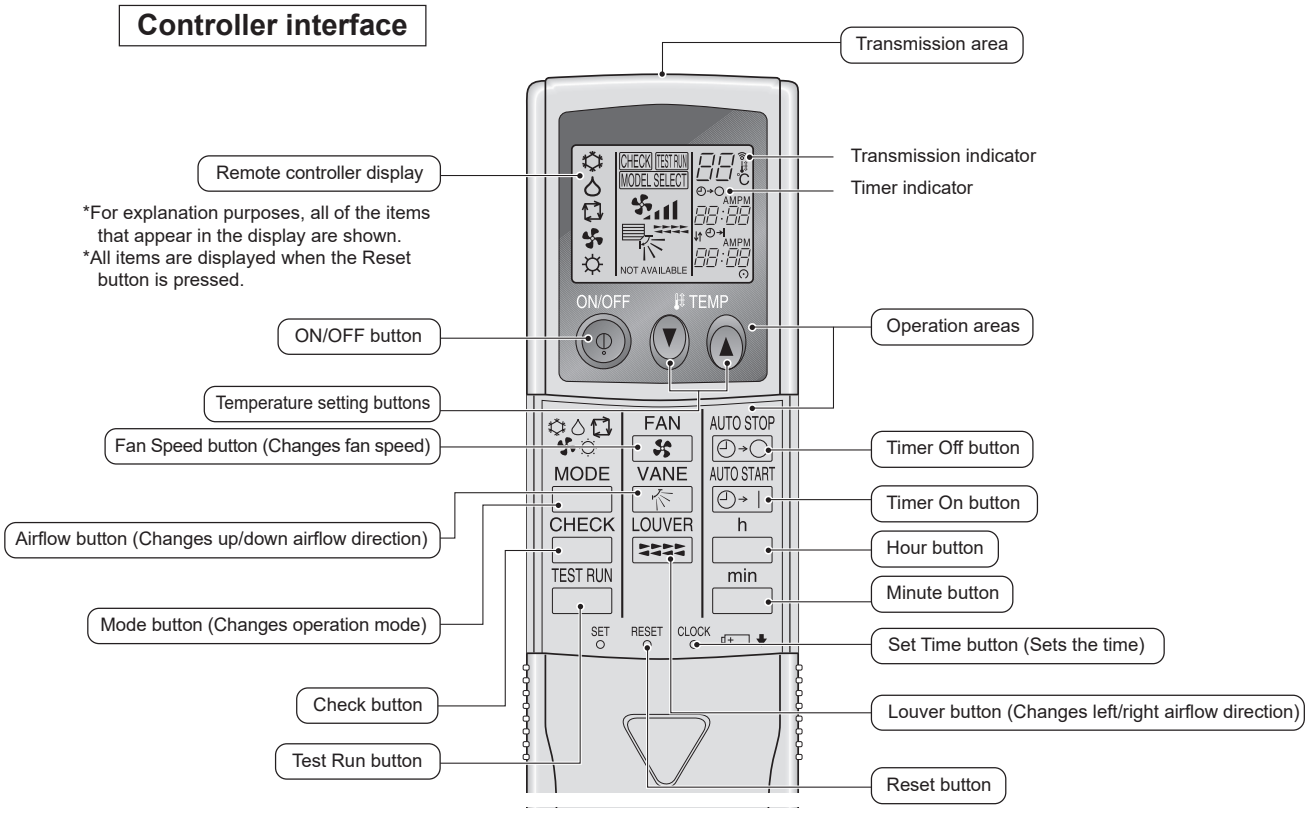

- When using the wireless remote controller, point it towards the receiver on the indoor unit.
- If the remote controller is operated within approximately two minutes after power is supplied to the indoor unit, the indoor unit may beep twice as the unit is performing the initial automatic check.
- The indoor unit beeps to confirm that the signal transmitted from the remote controller has been received. Signals can be received up to approximately 7 meters in a direct line from the indoor unit in an area 45 to the left and right of the unit. However, illumination such as fluorescent lights and strong light can affect the ability of the indoor unit to receive signals.
- If the operation lamp near the receiver on the indoor unit is blinking, the unit needs to be inspected. Consult your dealer for service.
- Handle the remote controller carefully. Do not drop the remote controller or subject it to strong shocks. In addition, do not get the remote controller wet or leave it in a location with high humidity.
- To avoid misplacing the remote controller, install the holder included with the remote controller on a wall and be sure to always place the remote controller in the holder after use.

<PAR-SL101A-E>

Controller interface

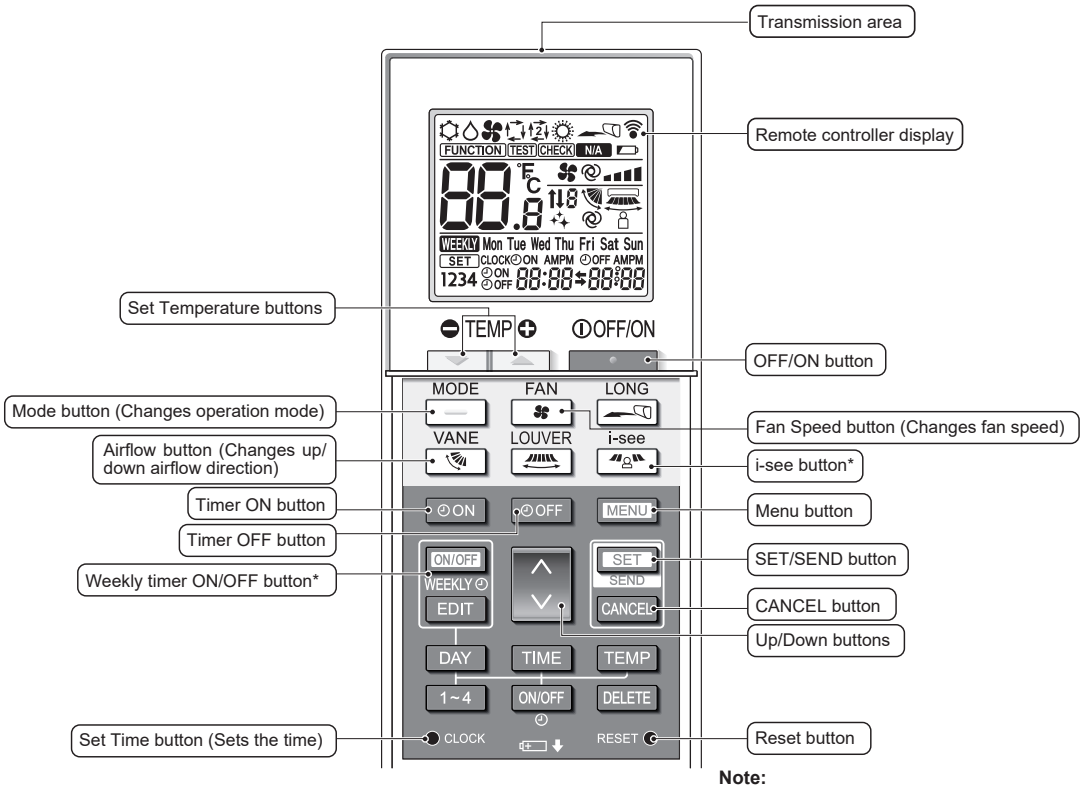

Note:

* **This button is enabled or disabled depending on the model of the indoor unit.**

Display

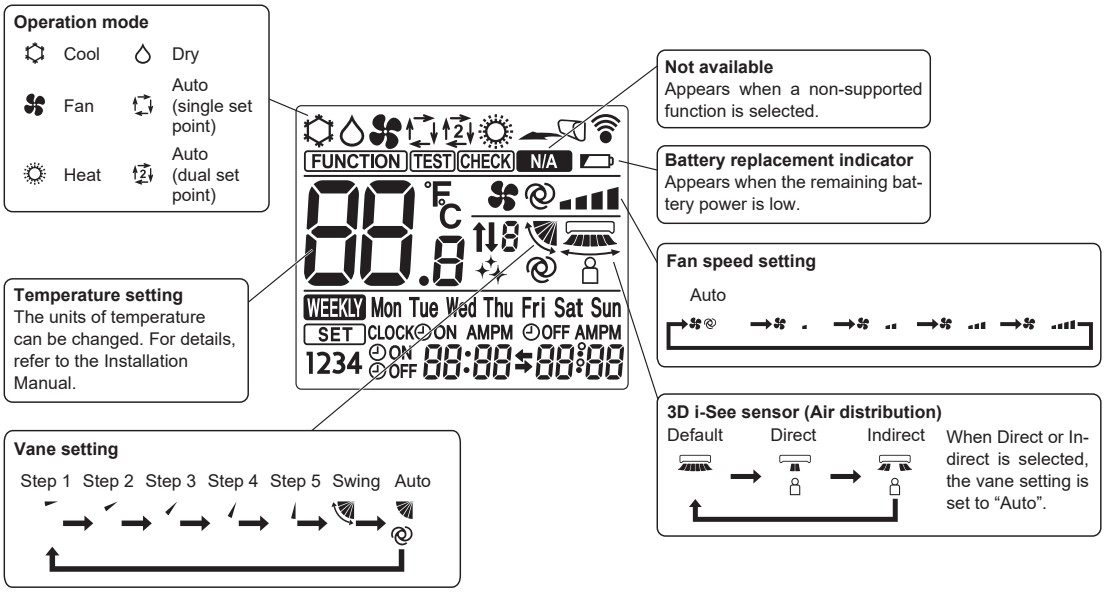

12-2. ERROR INFORMATION

When an error occurs, the following screen will appear.
Check the error status, stop the operation, and consult your dealer.

1. Check code, error unit, refrigerant address, model name, and serial number will appear.
   The model name and serial number will appear only if the information has been registered.

   Press the F1 or F2 button to go to the next page.

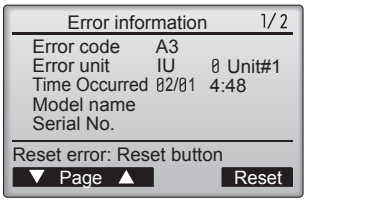

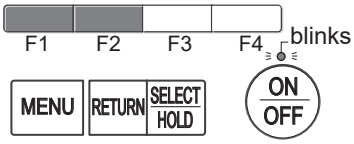

Contact information (dealer's phone number) will appear if the information has been registered.

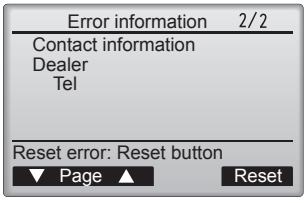

2. Press the F4 button or the [ON/OFF] button to reset the error that is occurring.

Errors cannot be reset while the ON/OFF operation is prohibited.

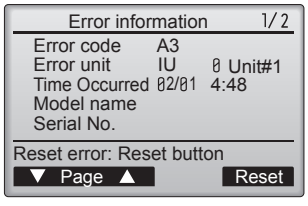

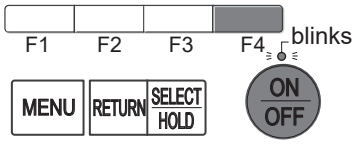

Select "OK" with the F4 button.

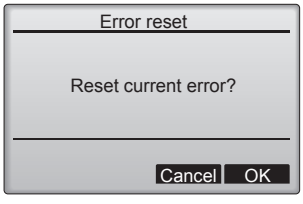

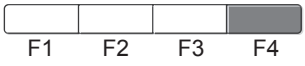

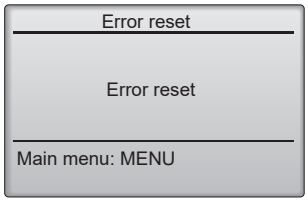

Navigating through the screens
- To go back to the Service menu ..... [MENU] button

· Checking the error information

While no errors are occurring, page 2/2 of the error information can be viewed by selecting "Error information" from the Maintenance menu.
Errors cannot be reset from this screen.

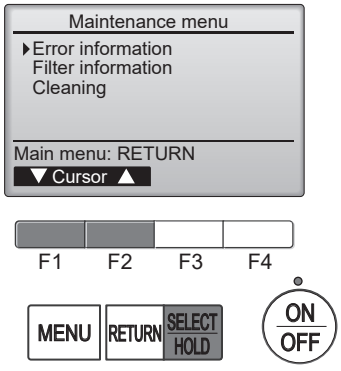

12-3. SERVICE MENU

Maintenance password is required

1. Select "Service" from the Main menu, and press the [SELECT] button.

   *At the main display, the menu button and select "Service" to make the maintenance setting.

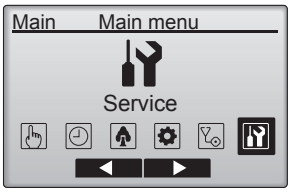

2. When the Service menu is selected, a window will appear asking for the password.

   To enter the current maintenance password (4 numerical digits), move the cursor to the digit you want to change with the F1 or F2 button.

   ▼

   Set each number (0 through 9) with the F3 or F4 button.

   ▼

   Then, press the [SELECT] button.

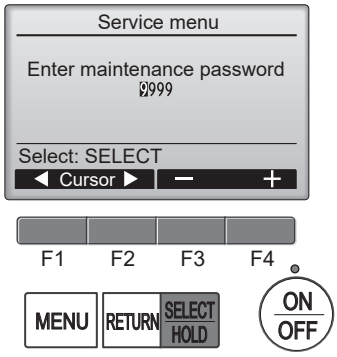

Note: The initial maintenance password is "9999". Change the default password as necessary to prevent unauthorized access. Have the password available for those who need it.

If you forget your maintenance password, you can initialize the password to the default password "9999" by pressing and holding the F1 button for 10 seconds on the maintenance password setting screen.

3. If the password matches, the Service menu will appear.

Note: Air conditioning units may need to be stopped to make only at "Settings". There may be some settings that cannot be made when the system is centrally controlled.

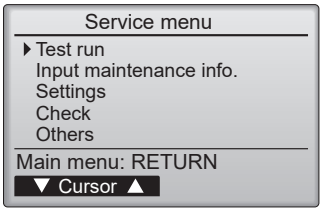

▼

A screen will appear that indicates the setting has been saved.

Navigating through the screens
- To go back to the Service menu ..... [MENU] button
- To return to the previous screen..... [RETURN] button

12-4. TEST RUN

12-4-1. PAR-41MAA

1. Select "Service" from the Main menu, and press the [SELECT] button.

Select "Test run" with the F1 or F2 button, and press the [SELECT] button.

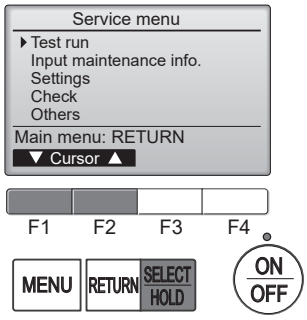

2. Select "Test run" with the F1 or F2 button, and press the [SELECT] button.

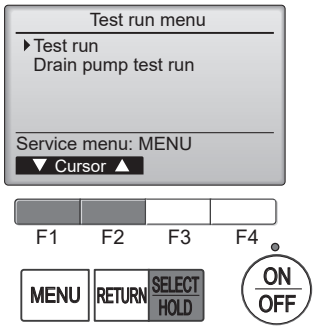

Test run operation

Press the F1 button to go through the operation modes in the order of "Cool and Heat".

Cool mode: Check the cold air blows out.
Heat mode: Check the heat blows out.

Check the operation of the outdoor unit's fan.

Press the [SELECT] button and open the Vane setting screen.

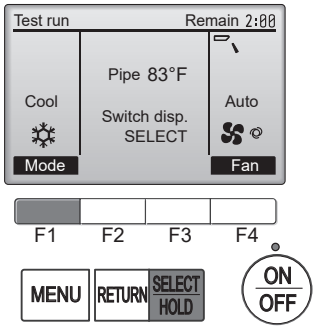

Auto vane check

Check the auto vane with the F1 F2 buttons.

Press the [RETURN] button to return to "Test run operation".

Press the [ON/OFF] button.

When the test run is completed, the "Test run menu" screen will appear.
The test run will automatically stop after 2 hours.
*The function is available only for the model with vanes.

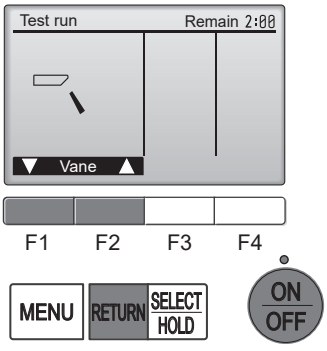

12-4-2. PAR-FL32MA

Measure an impedance between the power supply terminal block on the outdoor unit and ground with a 500 V Megger and check that it is equal to or greater than 1.0 MΩ.

① Turn on the main power to the unit.

② Press the TEST RUN button twice continuously.
(Start this operation from the status of remote controller display turned off.)
A TEST RUN and current operation mode are displayed.

③ Press the MODE ( ) button to activate COOL mode, then check whether cool air blows out from the unit.

④ Press the MODE ( ) button to activate HEAT mode, then check whether warm air blows out from the unit.

⑤ Press the FAN button and check whether strong air blows out from the unit.

⑥ Press the VANE button and check whether the auto vane operates properly.

⑦ Press the ON/OFF button to stop the test run.

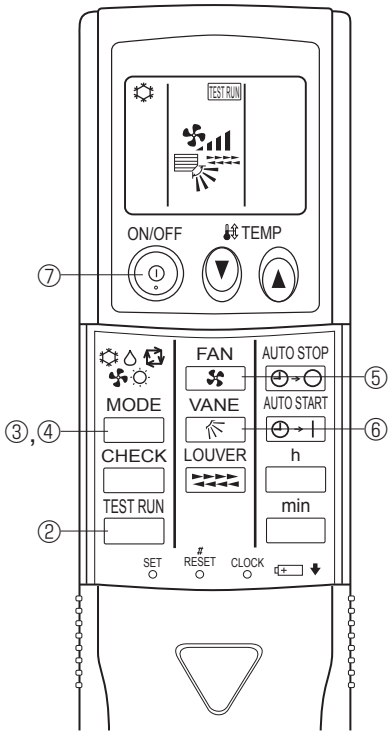

Note:

- **Point the remote controller towards the indoor unit receiver while following steps ② to ⑦.**
- **It is not possible to run in FAN, DRY or AUTO mode.**

12-4-3. PAR-SL101A-E

① Press the button ① to stop the air conditioner.
- If the weekly timer is enabled (WEEKLY is on), press the ON/OFF WEEKLY button ③ to disable it (WEEKLY is off).

② Press the MENU button ② for 5 seconds.
- CHECK comes on and the unit enters the service mode.

③ Press the MENU button ②.
- TEST Ⓑ comes on and the unit enters the test run mode.

④ Press the following buttons to start the test run.
- : Switch the operation mode between cooling and heating and start the test run.
- : Switch the fan speed and start the test run.
- : Switch the airflow direction and start the test run.
- : Switch the louver and start the test run.
- SET: Start the test run.

⑤ Stop the test run.
- Press the button ① to stop the test run.
- After 2 hours, the stop signal is transmitted.

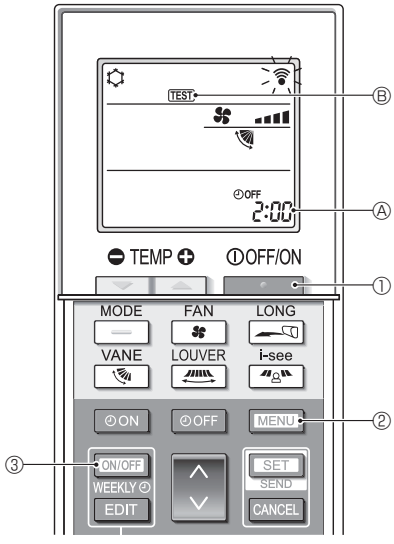

12-5. FUNCTION SETTING

12-5-1. PAR-41MAA

1. Select "Service" from the Main menu, and press the [SELECT] button.

   ▼

   Select "Setting" from the Service menu, and press the [SELECT] button.

   ▼

   Select "Function setting", and press the [SELECT] button.

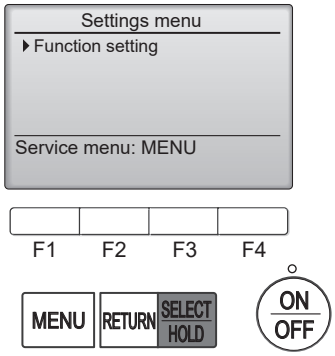

2. Set the indoor unit refrigerant addresses and unit numbers with the F1 through F4 buttons, and then press the [SELECT] button to confirm the current setting.

Note: Checking the indoor unit No.
When the [SELECT] button is pressed, the target indoor unit will start fan operation. If the unit is common or when running all units, all indoor units for the selected refrigerant address will start fan operation.

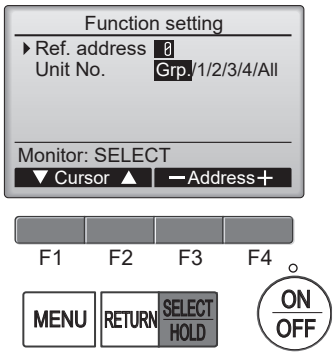

3. When data collection from the indoor units is completed, the current settings appears highlighted.
   Non-highlighted items indicate that no function settings are made.
   Screen appearance varies depending on the "Unit No." setting.

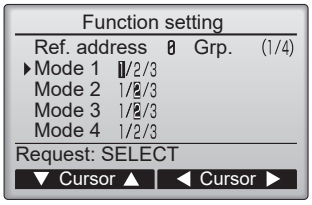

4. Use the F1 or F2 button to move the cursor to select the mode number, and change the setting number with the F3 or F4 button.

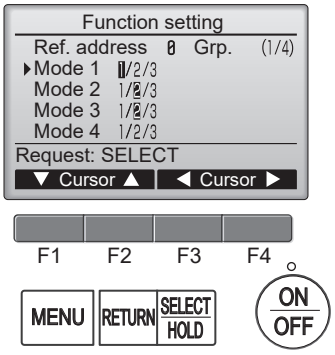

5. When the settings are completed, press the [SELECT] button to send the setting data from the remote controller to the indoor units.
   When the transmission is successfully completed, the screen will return to the Function setting screen.

Note:
- **Make the above settings only on Mr. Slim units as necessary.**
- **The above function settings are not available for the CITY MULTI units.**
- **Refer to the indoor unit Installation Manual for the detailed information about initial settings, mode numbers, and setting numbers for the indoor units.**
- **Be sure to write down the settings for all functions if any of the initial settings has been changed after the completion of installation work.**

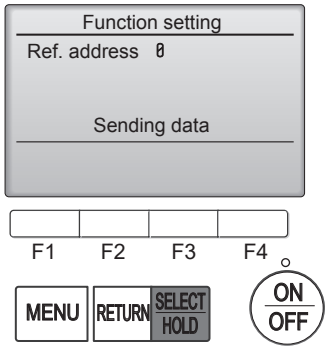

12-5-2. PAR-FL32MA

Functions can be selected with the wireless remote controller. Function selection using wireless remote controller is available only for refrigerant system with wireless function. Refrigerant address cannot be specified by the wireless remote controller.

[Flow of function selection procedure]

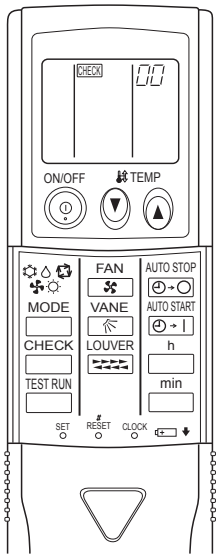

Flow of function selection procedure

The flow of the function selection procedure is shown below. This example shows how to turn off the function that raises the set temperature by 4 degrees during HEAT operation.
The procedure is given after the flow chart.

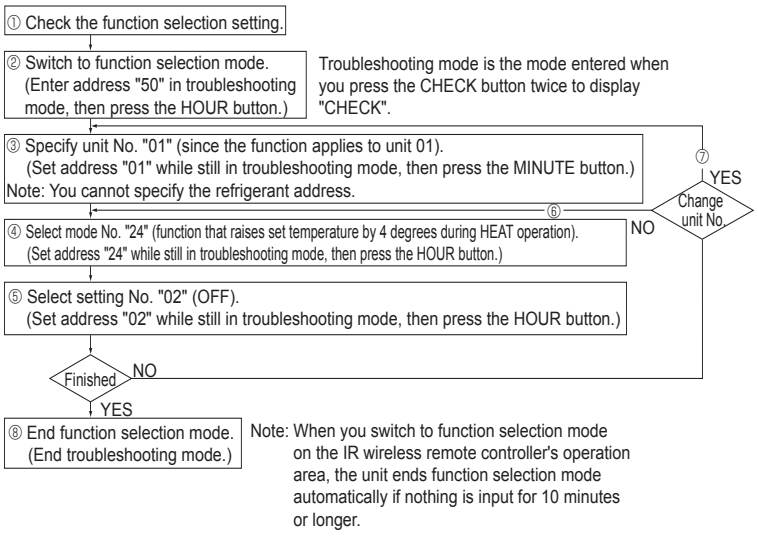

[Operating instructions]

① Check the function settings.

② Press the CHECK button twice continuously. → CHECK is lit and “00” blinks.
Press the TEMP button once to set “50”. Direct the IR wireless remote controller toward the receiver of the indoor unit and press the h button.

③ Set the unit number.
Press the TEMP button to set the unit number. (Press “01” to specify the indoor unit whose unit number is 01.)
Direct the IR wireless remote controller toward the receiver of the indoor unit and press the min button.
(By setting unit number with the min button, specified indoor unit starts performing fan operation.
Detect which unit is assigned to which number using this function. If unit number is set to AL, all the indoor units in same refrigerant system start performing fan operation simultaneously.)

Notes:
1. If a unit number that cannot be recognized by the unit is entered, 3 beeps of 0.4 seconds will be heard. Reenter the unit number setting.
2. If the signal was not received by the sensor, you will not hear a beep or a “double ping sound” may be heard. Reenter the unit number setting.

④ Select a mode.
Press the TEMP button to set a mode. Press “24” to turn on the function that raises the set temperature by 4 degrees during heat operation. Direct the IR wireless remote controller toward the sensor of the indoor unit and press the h button.
→ The sensor-operation indicator will blink and beeps will be heard to indicate the current setting number.
Current setting number: 1 = 1 beep (one second)
2 = 2 beeps (one second each)
3 = 3 beeps (one second each)

Notes:
1. If a mode number that cannot be recognized by the unit is entered, 3 beeps of 0.4 seconds will be heard. Reenter the mode number.
2. If the signal was not received by the sensor, you will not hear a beep or a “double ping sound” may be heard. Reenter the mode number.

⑤ Select the setting number.
Press the TEMP button to select the setting number. (02: Not available)
Direct the IR wireless remote controller toward the receiver of the indoor unit and press the h button.
→ The sensor-operation indicator will blink and beeps will be heard to indicate the setting number.
Setting number: 1 = 2 beeps (0.4 seconds each)
2 = 2 beeps (0.4 seconds each, repeated twice)
3 = 2 beeps (0.4 seconds each, repeated 3 times)

Notes:
1. If a setting number that cannot be recognized by the unit is entered, the setting will turn back to the original setting.
2. If the signal was not received by the sensor, you will not hear a beep or a “double ping sound” may be heard. Reenter the setting number.

⑥ Repeat steps ④ and ⑤ to make an additional setting without changing unit number.

⑦ Repeat steps ③ to ⑤ to change unit number and make function settings on it.

⑧ Complete the function settings
Press button.

Do not use the wireless remote controller for 30 seconds after completing the function setting.

12-5-3. PAR-SL101A-E

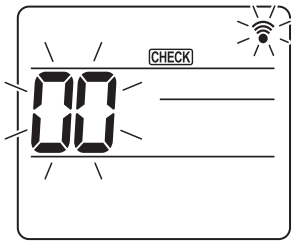

Fig. 1

1. Going to the function select mode
   Press the MENU button between of 5 seconds.
   (Start this operation from the status of remote controller display turned off.)
   [CHECK] is lit and "00" blinks. (Fig. 1)
   Press the button to set the "50".
   Direct the wireless remote controller toward the receiver of the indoor unit and press the SET button.

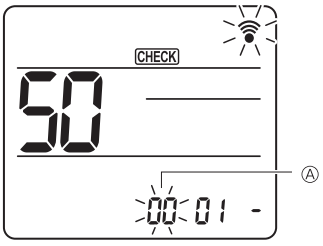

Fig. 2

2. Setting the unit number
   Press the button to set unit number Ⓐ. (Fig. 2)
   Direct the wireless remote controller toward the receiver of the indoor unit and press the SET button.

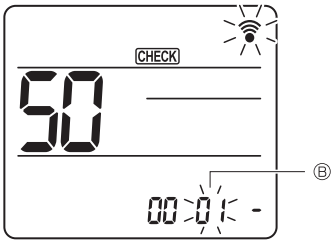

Fig. 3

3. Select a mode
   Press the button to set Mode number Ⓑ. (Fig. 3)
   Direct the wireless remote controller toward the receiver of the indoor unit and press the SET button.
   Current setting number: 1=1 beep (1 second)
   2=2 beeps (1 second each)
   3=3 beeps (1 second each)

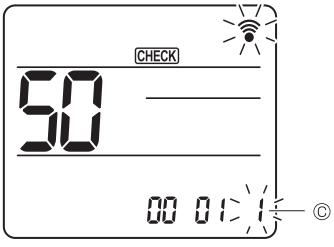

Fig. 4

4. Selecting the setting number
   Use the button to change the Setting number Ⓒ. (Fig. 4)
   Direct the wireless remote controller toward the receiver of the indoor unit and press the SET button.
5. To select multiple functions continuously
   Repeat select ③ and ④ to change multiple function settings continuously.
6. Complete function selection
   Direct the wireless remote controller toward the sensor of the indoor unit and press the ⏻OFF/ON button.

Note: Be sure to write down the settings for all functions if any of the initial settings has been changed after the completion of installation work.

12-6. ERROR HISTORY

1. Select "Service" from the Main menu, and press the [SELECT] button.

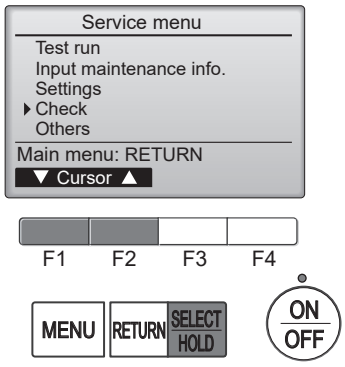

Select "Check" with the F1 or F2 button, and press the [SELECT] button.

2. Select ˝Error history˝ with the F1 or F2 button, and press the [SELECT] button.

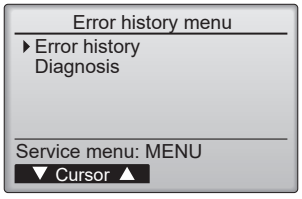

3. 16 error history records will appear.

4 records are shown per page, and the top record on the first page indicates the latest error record.

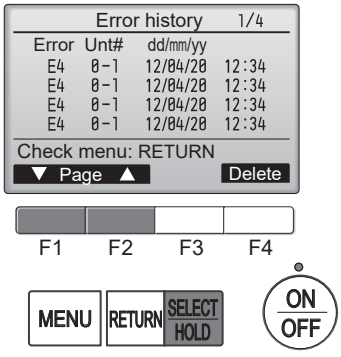

4. Deleting the error history

To delete the error history, press the F4 button (Delete) on the screen that shows error history.
A confirmation screen will appear asking if you want to delete the error history.

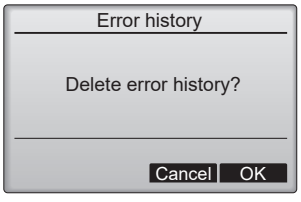

Press the F4 button (OK) to delete the history.

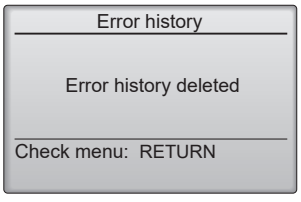

"Error history deleted" will appear on the screen.

Press the [RETURN] button to go back to the Check menu screen.

12-7. SELF-DIAGNOSIS

12-7-1. PAR-41MAA

1. Select "Service" from the Main menu,
   and press the [SELECT] button.

   ▼

   Select "Check" from the Service menu,
   and press the [SELECT] button.

   ▼

   Select "Diagnosis" from the Check menu,
   and press the [SELECT] button.

   ▼

   Select "Self check" with the F1 or F2 button,
   and press the [SELECT] button.

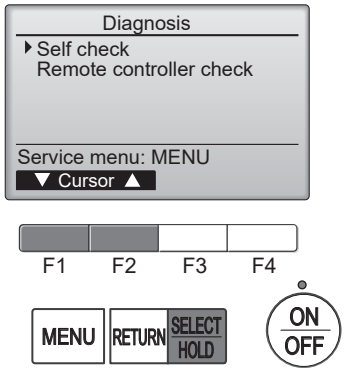

2. With the F1 or F2 button, enter the refrigerant address, and press the [SELECT] button.

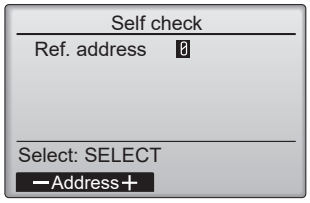

3. Check code, unit number, attribute will appear.
   "-" will appear if no error history is available.

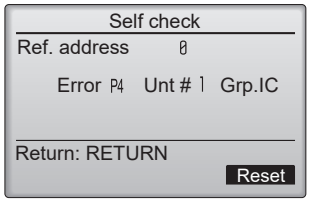

When there is no error history

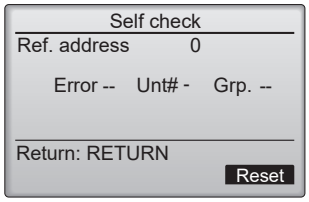

4. Resetting the error history

   Press the F4 button (Reset) on the screen that shows the error history.

   ▼

   A confirmation screen will appear asking if you want to delete the error history.

   ▼

   Press the F4 button (OK) to delete the error history.

   If deletion fails, "Request rejected" will appear.
   "Unit not exist" will appear if no indoor units that are correspond to the entered address are found.

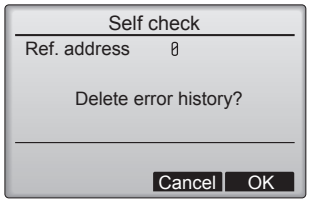

▼

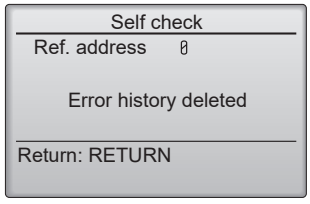

Navigating through the screens
- To go back to the Service menu ..... [MENU] button
- To return to the previous screen..... [RETURN] button

12-7-2. PAR-FL32MA

When a malfunction occurs to air conditioner, both indoor unit and outdoor unit will stop and operation lamp blinks to inform unusual stop.

<Malfunction-diagnosis method at maintenance service>

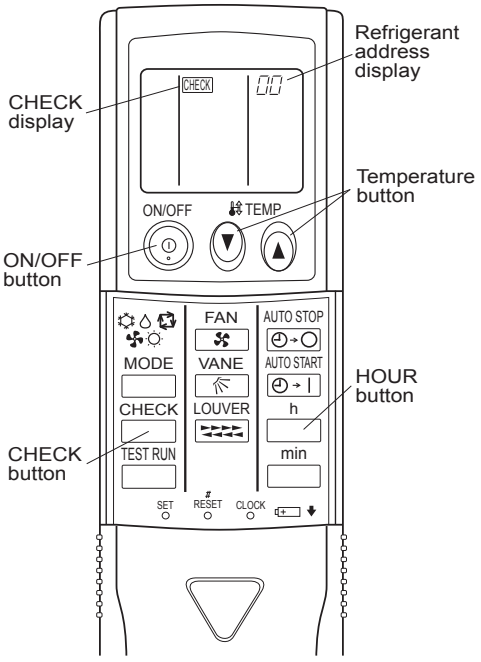

[Procedure]

1. Press the CHECK button twice.
   - "CHECK" lights, and refrigerant address "00" blinks.
   - Check that the remote controller's display has stopped before continuing.

2. Press the TEMP ▼ ▲ buttons.
   - Select the refrigerant address of the indoor unit for the self-diagnosis.

   Note: Set refrigerant address using the outdoor unit's DIP switch (SW1). (For more information, see the outdoor unit installation manual.)

3. Point the remote controller at the sensor on the indoor unit and press the HOUR button.
   - If an air conditioner error occurs, the indoor unit's sensor emits an intermittent buzzer sound, the operation light blinks, and the check code is output.
     (It takes 3 seconds at most for check code to appear.)

4. Point the remote controller at the sensor on the indoor unit and press the ON/OFF button.
   - The check mode is cancelled.

12-7-3. PAR-SL101A-E

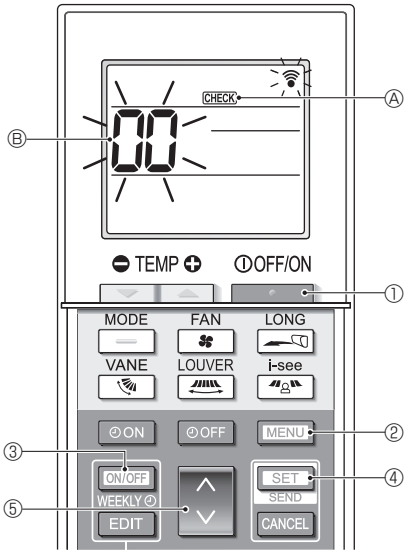

[Procedure]

1. Press the button ① to stop the air conditioner.
   - If the weekly timer is enabled (WEEKLY is on), press the ON/OFF WEEKLY button ③ to disable it (WEEKLY is off).

2. Press the MENU button ② for 5 seconds.
   - CHECK Ⓐ comes on and the unit enters the self-check mode.

3. Press the button ⑤ to select the refrigerant address (M-NET address) Ⓑ of the indoor unit for which you want to perform the self-check.

4. Press the SET button ④.
   - If an error is detected, the check code is indicated by the number of beeps from the indoor unit and the number of blinks of the OPERATION INDICATOR lamp.

5. Press the button ①.
   - CHECK Ⓐ and the refrigerant address (M-NET address) Ⓑ go off and the self-check is completed.

12-8. REMOTE CONTROLLER CHECK

If operations cannot be completed with the remote controller, diagnose the remote controller with this function.

1. Select "Service" from the Main menu, and press the [SELECT] button.

   Select "Check" from the Service menu, and press the [SELECT] button.

   Select "Diagnosis" from the Check menu, and press the [SELECT] button.

   Select "Remote controller check" with the F1 or F2 button, and press the [SELECT] button.

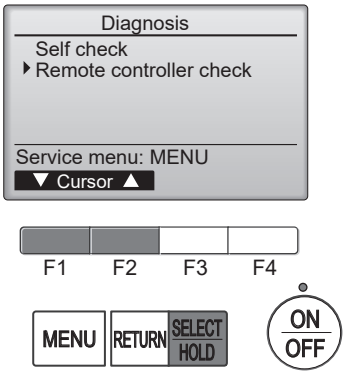

2. Select "Remote controller check" from the Diagnosis menu, and press the [SELECT] button to start the remote controller check and see the check results.

   To cancel the remote controller check and exit the "Remote controller check" menu screen, press the [MENU] or the [RETURN] button.

   The remote controller will not reboot itself.

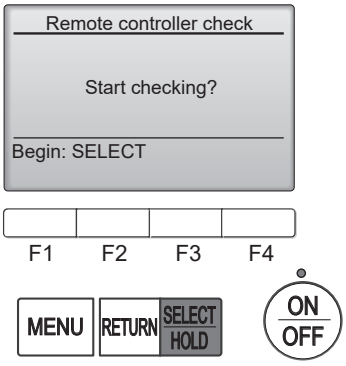

3.

OK:	No problems are found with the remote controller. Check other parts for problems.
E3, 6832:	There is noise on the transmission line, or the indoor unit or another remote controller is faulty. Check the transmission line and the other remote controllers.
NG (ALL0, ALL1):	Send-receive circuit fault. The remote controller needs replacing.
ERC:	The number of data errors is the discrepancy between the number of bits in the data transmitted from the remote controller and that of the data that was actually transmitted over the transmission line. If data errors are found, check the transmission line for external noise interference.

Remote controller check results screen

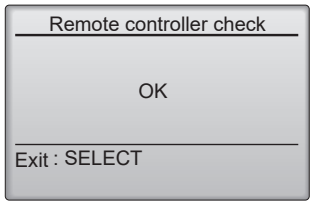

If the [SELECT] button is pressed after the remote controller check results are displayed, remote controller check will end, and the remote controller will automatically reboot itself.

Check the remote controller display and see if anything is displayed (including lines). Nothing will appear on the remote controller display if the correct voltage (8.5–12 VDC) is not supplied to the remote controller. If this is the case, check the remote controller wiring and indoor units.

12-9. SMOOTH MAINTENANCE

1. Select "Service" from the Main menu, and press the [SELECT] button.

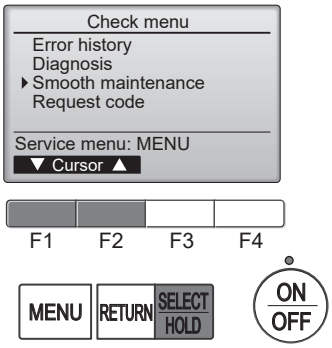

Select "Check" with the F1 or F2 button, and press the [SELECT] button.

Select "Smooth maintenance" with the F1 or F2 button, and press the [SELECT] button.

---

2. Set each item.

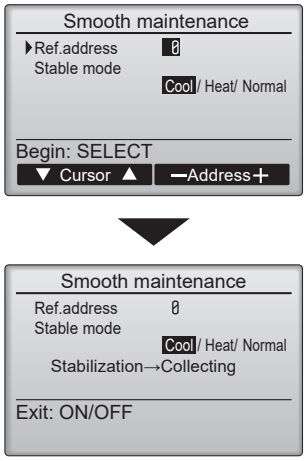

Select the item to be changed with the F1 or F2 button.

Select the required setting with the F3 or F4 button.

■<Ref.address>setting [0] – [15]
■<Stable mode>setting [Cool] / [Heat] / [Normal]

Press the [SELECT] button, Fixed operation will start.

Note: Stable mode will take approx. 20 minutes.

---

3. The operation data will appear.

The Compressor-Accumulated operating (COMP. run) time is 10-hour unit, and the Compressor-Number of operation times (COMP. ON/OFF) is a 100-time unit (fractions discarded).

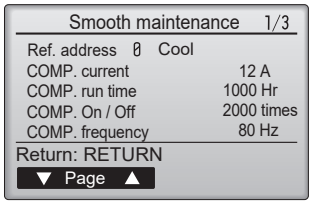

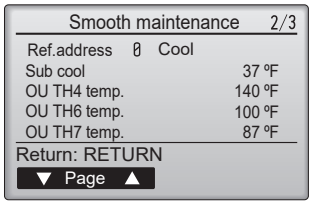

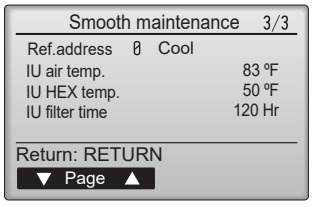

Navigating through the screens
- To go back to the Service menu ..... [MENU] button
- To return to the previous screen ..... [RETURN] button

■ Refrigerant address

Single refrigerant system

In the case of single refrigerant system, the refrigerant address is "00" and no operation is required.
Simultaneous twin, triple units belong to this category (single refrigerant system).

Multi refrigerant system (group control)

Up to 16 refrigerant systems (16 outdoor units) can be connected as a group by 1 remote controller. To check or set the refrigerant addresses.

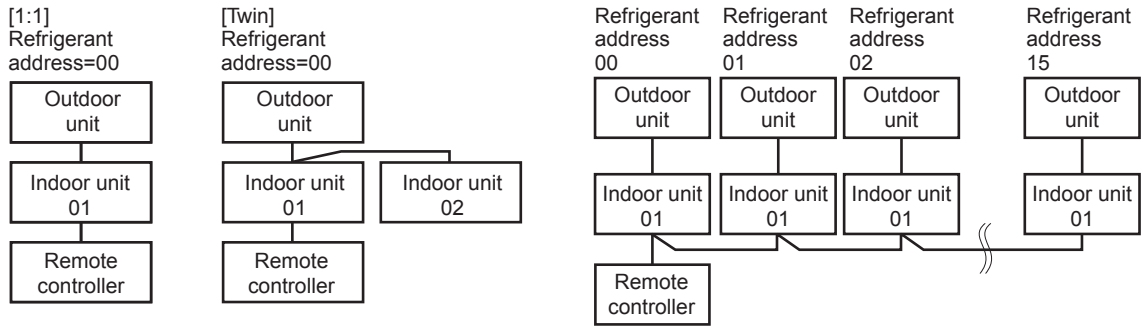

12-10. REQUEST CODE

Details on the operation data including each thermistor temperature and error history can be confirmed with the remote controller.

1. Select "Service" from the Main menu, and press the [SELECT] button.

   ▼

   Select "Check" with the F1 or F2 button, and press the [SELECT] button.

   ▼

   Select "Request code" with the F1 or F2 button, and press the [SELECT] button.

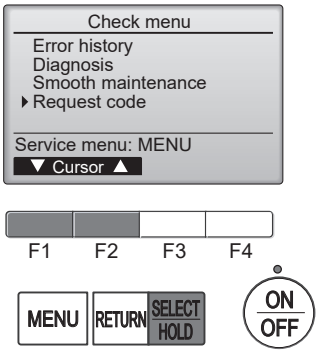

2. Set the Refrigerant address and Request code.

   Select the item to be changed with the F1 or F2 button.

   ▼

   Select the required setting with the F3 or F4 button.

■<Ref.address>setting [0] – [15]
■<Request code>setting

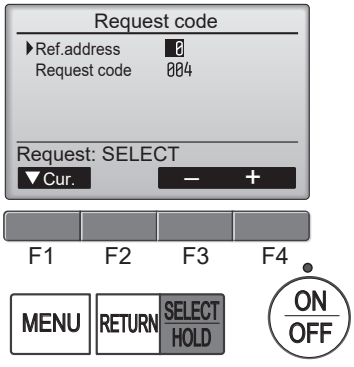

Press the [SELECT] button, Data will be collected and displayed.

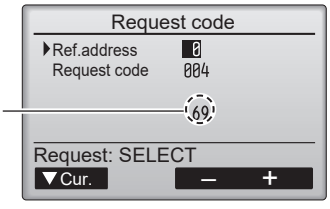

Request code: 004
Discharge temperature: 69˚C

MITSUBISHI ELECTRIC CORPORATION

HEAD OFFICE: TOKYO BUILDING, 2-7-3, MARUNOUCHI, CHIYODA-KU, TOKYO100-8310, JAPAN

©Copyright 2023 MITSUBISHI ELECTRIC CORPORATION
Issued: Dec. 2023 No. OCH810B
Issued: Sep. 2023 No. OCH810A
Published: Mar. 2023 No. OCH810
Made in Japan

Specifications are subject to change without notice.